MATERIAL: HOUSING-PBT POLYESTER UL-94V-0
MIXED GLASS FIBER.
STANDARD COLOR-BLACK
CONTACTS-0.35mm THICK PHOS-BRONZE
PLATED WITH HARD GOLD AND
TIN IN SOLDER AREA.
OPERATING TEMPERATURE:-40°C+85°C
CAVITY CONFIRMS TO FCC RULES AND REGULATIONS
PART 68,SUBPART F.

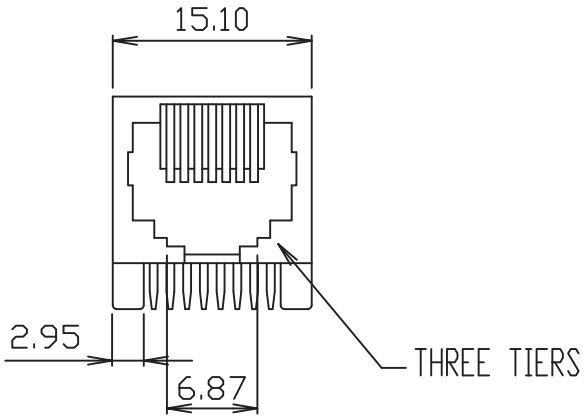

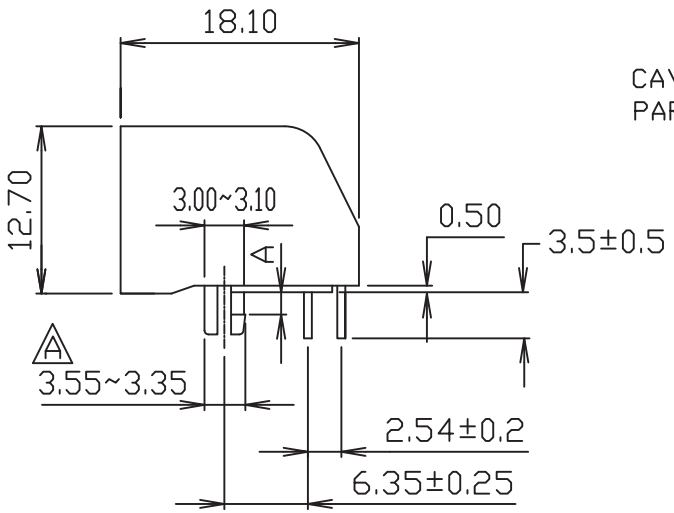

REVISIONS			
LTR	DESCRIPTION	DATE	APP
A	3.40±0.05	09/21/'00	

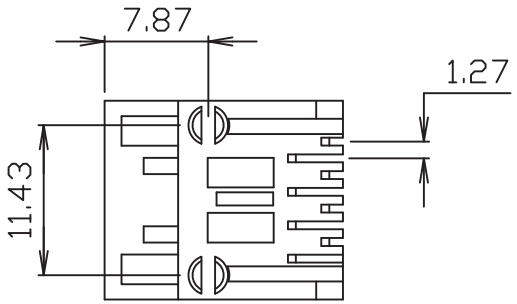

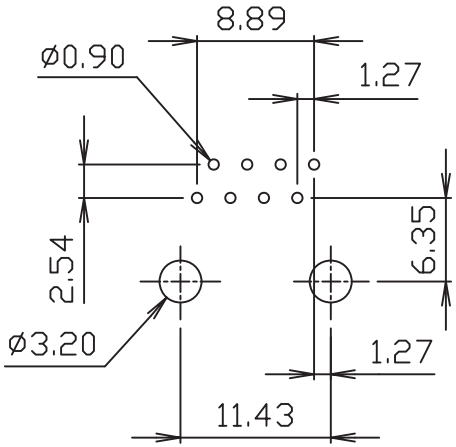

PC Board Layout

RoHS Compliant

MORETHANALL
PCB CONNECTORS
Cable ASSEMBLIES
煜倫股份有限公司
www.morethanall.com

DRAWING BY CY		TOLERANCES ARE
CHECKED BY GENIUS		X. ±
UNIT / mm	SCALE 1 : 1	.X ± 0.25
		.XX ± 0.13
DATE		.XXX ± 0.05
		ANG ±
SIZE A4	PPOJECTION	

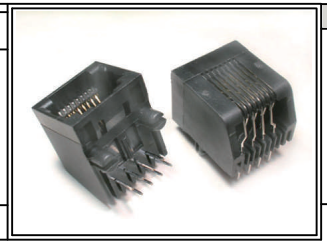

ORDER INFORMATION

MJ12J-KX06-0808-LF

SERIES
BLACK
NON EAR
06:GOLD 6u"
8P8C
LEADFREE

DESCRIPTION: 8 POSITION FLANGED LOW PROFILE SIDE ENTRY PCB JACK