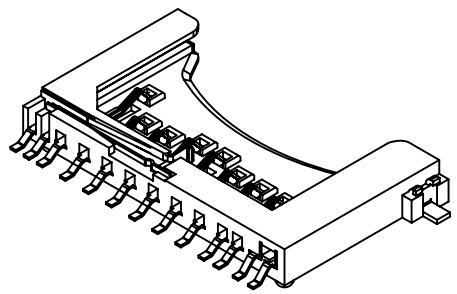

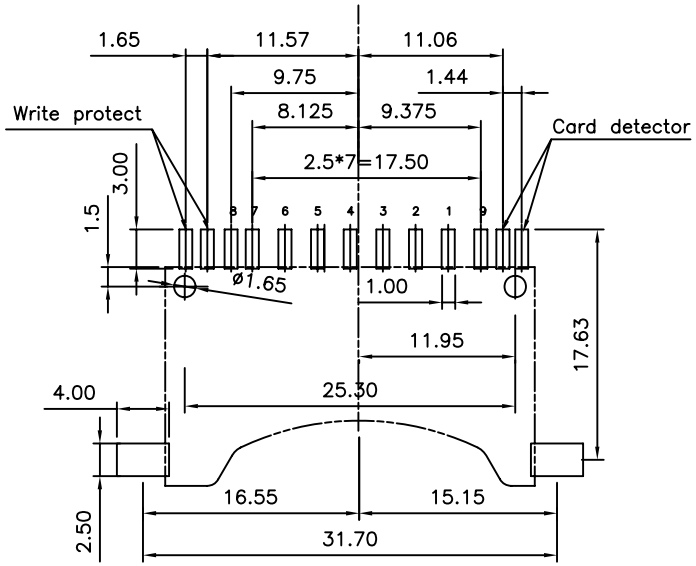

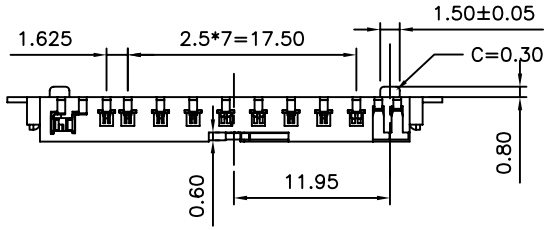

SPECIFICATION
MATERIAL
Insulator: Thermal Plastic UL94V-0
Contacts: Copper Alloy
Boardlock: Copper Alloy
CONTACT PLATING
Underplated: 50㎛ Nickel
Contact Area: 1㎛~30㎛ Selective Gold
Solder Tails Area: 100㎛ Tin/Lead(Brighten Tin) or
100㎛ Tin/Lead Free(Brighten Tin/Matte Tin)
ELECTRICAL
Current Rating: 1 Amps Max.
Contact Resistance: 100 mohms Max.
Insulation Resistance: 1000 Mohms Min.
MECHANICAL
Mating Cycle: 5000 Cycles Minute
Operating temperature: -40°C To +85°C

14 RECOMMENDED P.C.B LAYOUT
TOLERANCES: ±0.05mm

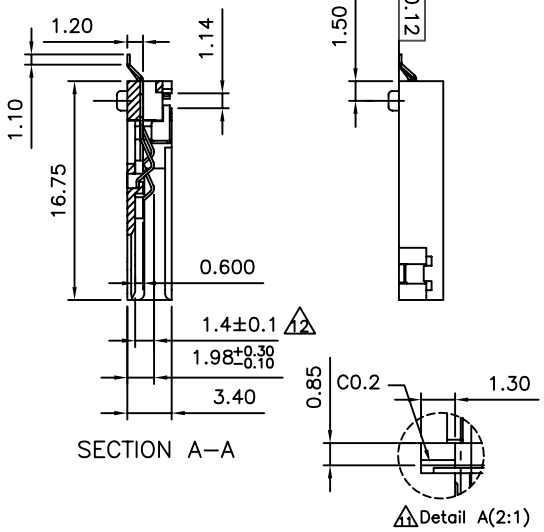

SECTION A-A

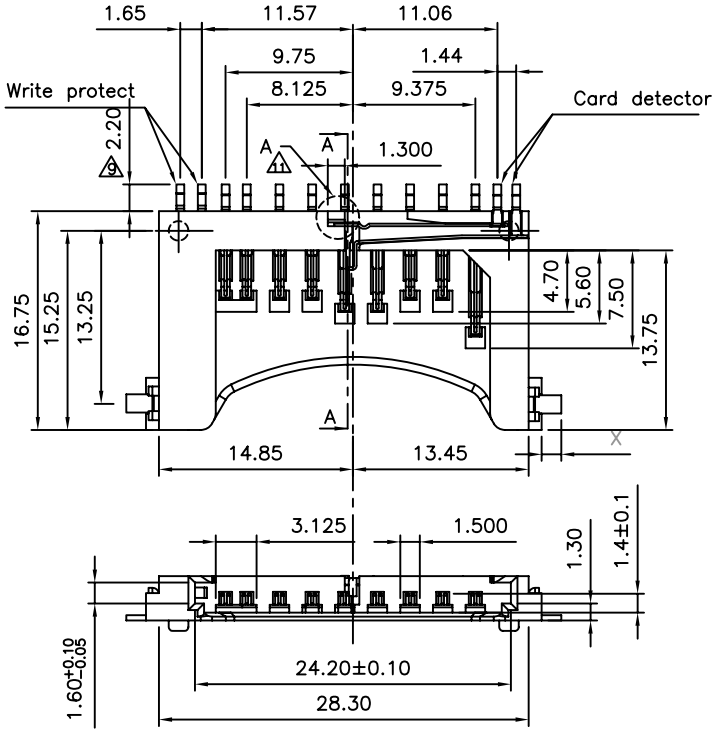

SDC-W25XB-09-LF
LEADFREE

RoHS Compliant

MORETHANALL CONNECTORS ASSEMBLIES	PART NO. SDC-W25XB-09						
	DWG NO. SDC-W25XB-09	CHECKED BY CY	TOLERANCES ARE .X ± 0.2 .XX ± .XXX ± AWG	DESCRIP TION:	MEMORY CARD SECURE DIGITAL (STANDARD)		
煜倫股份有限公司	FILE NO.	DRAWING BY					
	UNIT / mm	SCALE 1 : 1	PROJECTION	AREA	REVISIONS	HK	DATE