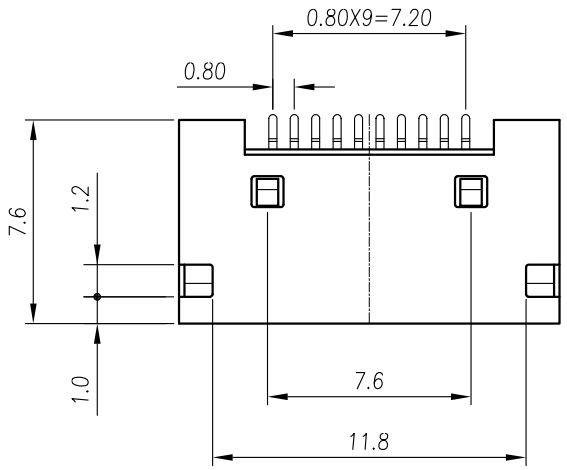

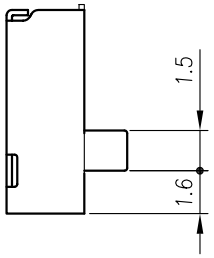

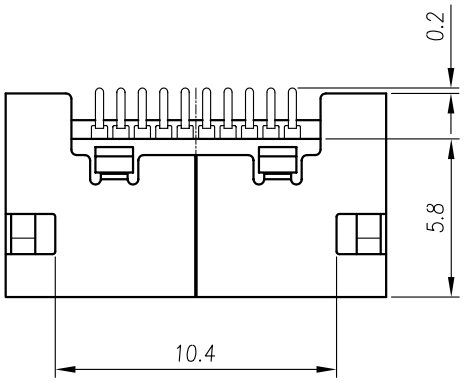

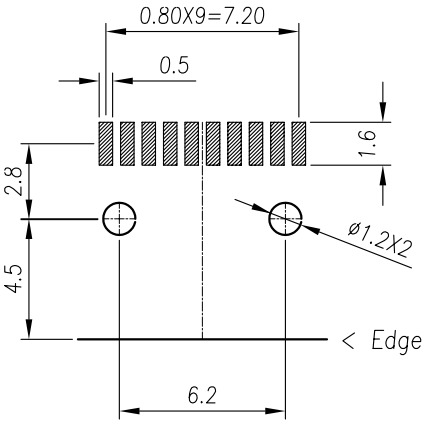

Recommend P.C.B Layout

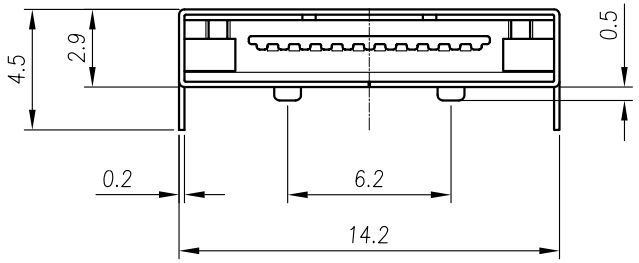

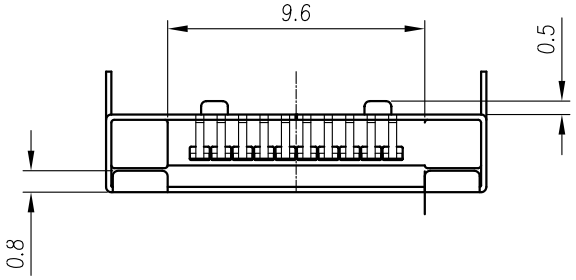

備註 /NOTE

1. 安規 /FAFETY :
   - 1-1. 規格 /RATING : 100V AC MAX OR 12V DC 2A MAX
   - 1-2. 絕緣阻抗 /INSULATION RESISTANCE : 100M MIN AT 500 DC
   - 1-3. 絕緣耐壓 /DIELECTRIC WITHSTANDING VOLTANGE : 1000V AC AT 1 MINUTE
2. 材質 /MATERIAL :
   - 2-1. 鐵殼 /SHELL : 不鏽鋼/STAINLESS
   - 2-2. 膠芯 /HOUSING : LCP
   - 2-3. 端子 /PIN : 燐銅 /PHOSPHOR BRONZE
3. 電鍍 /PLATING :
   - 3-1. 端子 /PIN : 錫,金 10u"/TIN,GOLD 10u"

PCM-JW-10-LF

LEADFREE

RoHS Compliant

MORETHANALL CONNECTORS ASSEMBLIES

煜倫股份有限公司

PART NO. **PCM-JW-10**							
DWG NO. **PCM-JW-10**	CHECKED BY CY	TOLERANCES ARE .X ± 0.2 .XX ± .XXX ± AWG	DESCRIP TION:	PCMCIA 10PIN 母座成品			
FILE NO.	DRAWING BY						
UNIT / mm	SCALE 1 : 1	PROJECTION	AREA	REVISIONS	HK	DATE	