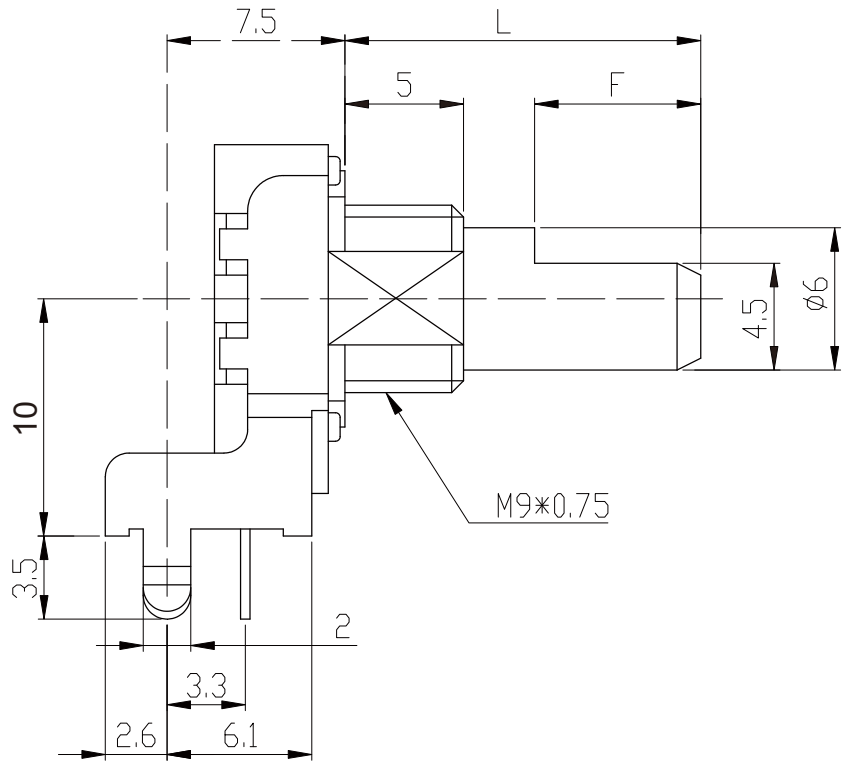

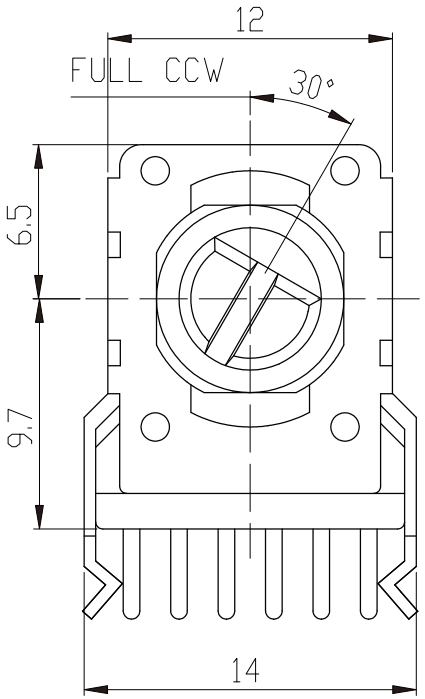

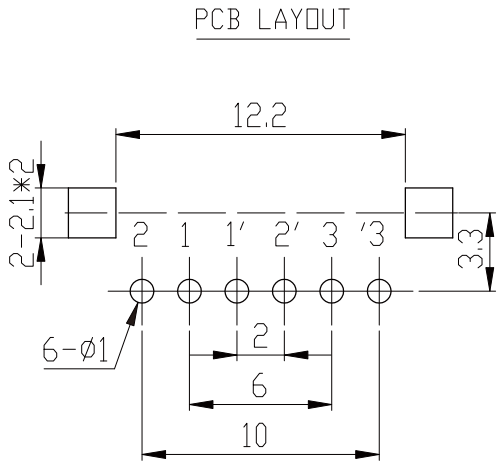

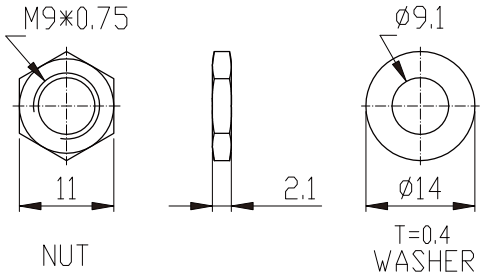

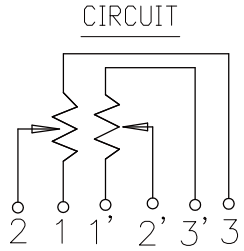

CODE	125F	150F	175F	200F	225F	250F	275F	300F	未标注公差	
L=	12.5	15	17.5	20	22.5	25	27.5	30	10 以下	±0.3
F=	7	7	12	12	12	12	12	12	10 ~100	±0.5
choose									100 以上	±0.8

RoHS Compliant

MORETHANALL
PCB CONNECTORS
Cable ASSEMBLIES
煜倫股份有限公司
www.morethanall.com

DRAWING BY CY		TOLERANCES ARE
CHECKED BY GENIUS		X. ±
UNIT / mm	SCALE 1 : 1	.X ±
		.XX ±
DATE		.XXX ±
		ANG ±
SIZE A4	PPOJECTION	

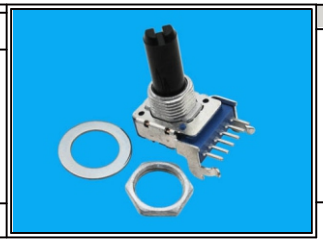

ORDER INFORMATION

RTPW-RxxxFPBNW-1X06-LF

SERIES
DIP 90°
125:12.5mm LONG
300:30.0mm LONG
FLAT AXIS
PANEL BACK
NUT+WASHER
06 WAY
LEADFREE

DESCRIPTION: