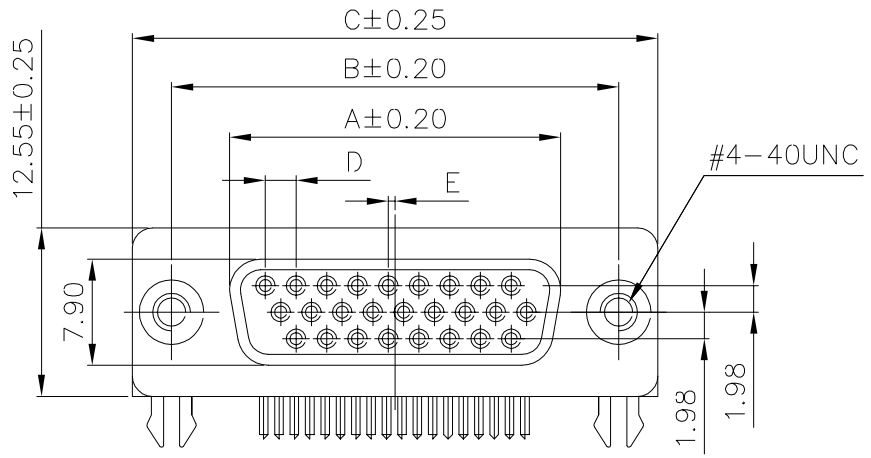

Material:
Insulator: PBT+30% Glass Fiber (UL94V-0).
Contact: Copper Alloy.
Contact Plated: Gold or Tin over Nickel Plated.
Shell: Steel with Nickel or Tin or Zinc Plated.
Specification:
Current Rating: 5 Amps.
Withstanding Voltage: AC 500V for 1 Minute.
Insulation Resistance: 1000MΩ Min. at DC 500V.
Contact Resistance: 15mΩ Max..
Operating Temperature: -40°C ~ +105°C.

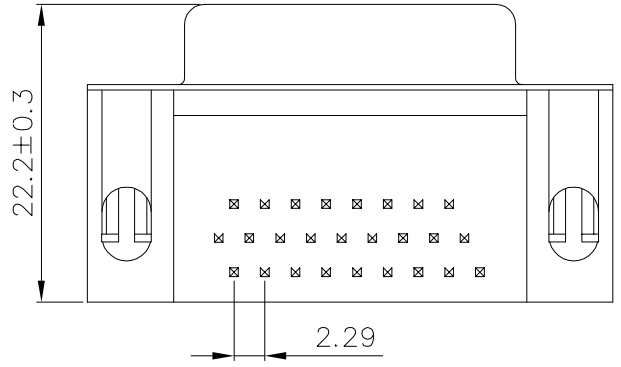

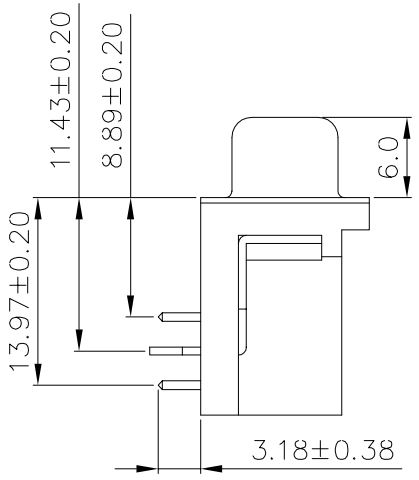

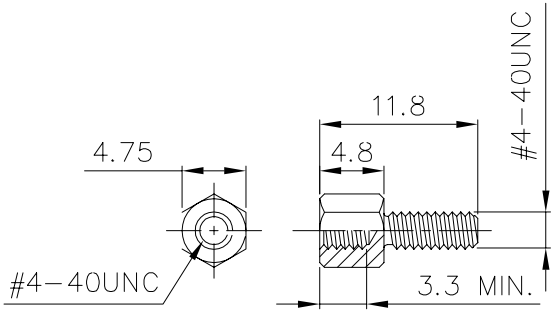

LOCKING SCREW

Pos.	Dim. A	Dim. B	Dim. C	Dim. D	Dim. E
15	16.33	24.99	30.81	2.29	0.25
26	24.66	33.32	39.14	2.29	0.51
44	38.38	47.04	53.04	2.29	0.51
62	54.84	63.50	69.32	2.41	0.58

RoHS Compliant

MORETHANALL PCB CONNECTORS Cable ASSEMBLIES
煜倫股份有限公司
www.morethanall.com

DRAWING BY CY		TOLERANCES ARE
CHECKED BY GENIUS		X. ± .X ± 0.20 .XX ± 0.10 .XXX ± ANG ±
UNIT / mm	SCALE 1 : 1	
DATE		
SIZE A4	PPOJECTION	

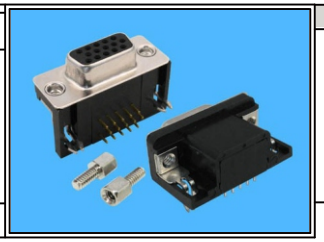

ORDER INFORMATION

HDR-SxNH-xx-LF

SERIES
FEMALE
NUT
S:SEMI GOLD
G:FULL GOLD
HEX SCREW
15~62 WAY
LEADFREE

DESCRIPTION: HI Density Female Right Angle 8.89mm / Clinch nut type