NOTES:
PLATING: GOLD FLASH
REEL & TAPE: 10000PCS

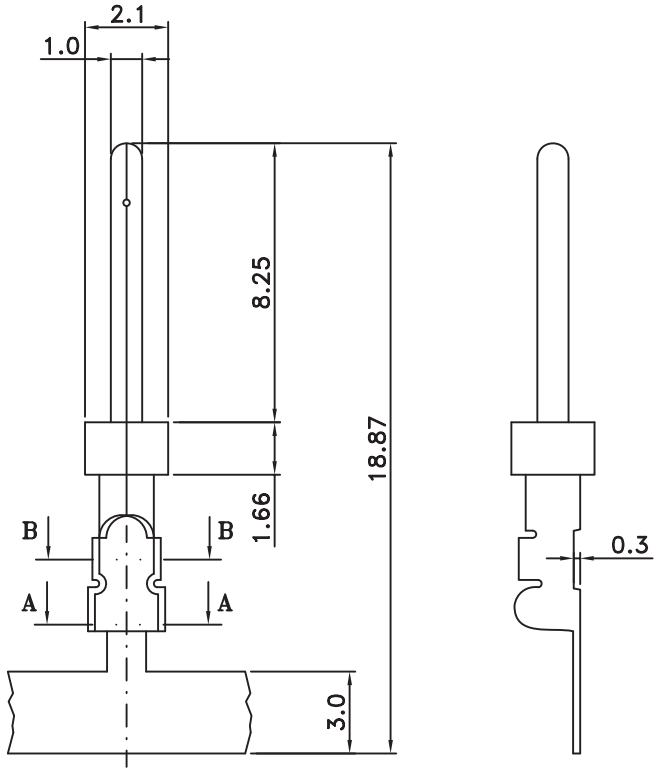

P/N:	WIRE APPLICATION	P/N:	WIRE APPLICATION
DC-M-20	AWG20-AWG22	DC-M-24	AWG24-AWG26

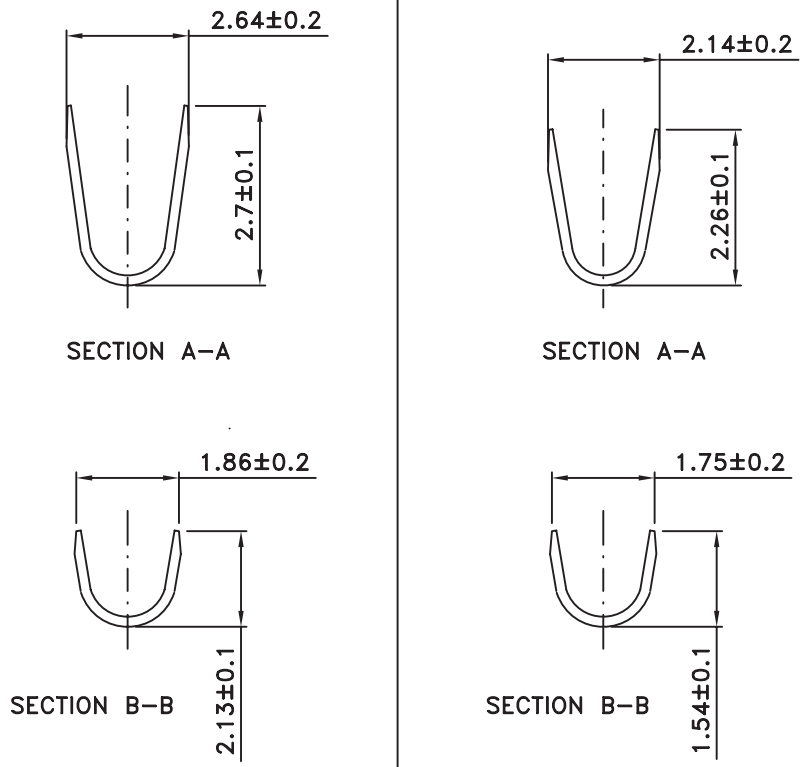

RoHS Compliant

MORETHANALL
PCB CONNECTORS
Cable ASSEMBLIES
煜倫股份有限公司
www.morethanall.com

DRAWING BY CY		TOLERANCES ARE
CHECKED BY GENIUS		X. ± .X ± .XX ± .XXX ± ANG ±
UNIT / mm	SCALE 1 : 1	
DATE		
SIZE A4	PPOJECTION	

ORDER INFORMATION

DC-M-xx-LF
SERIES
LEADFREE
20:20~22AWG
24:24~26AWG
MALE TERMINAL

DESCRIPTION: D-SUB STANDARD CRIMP TERMINAL MALE