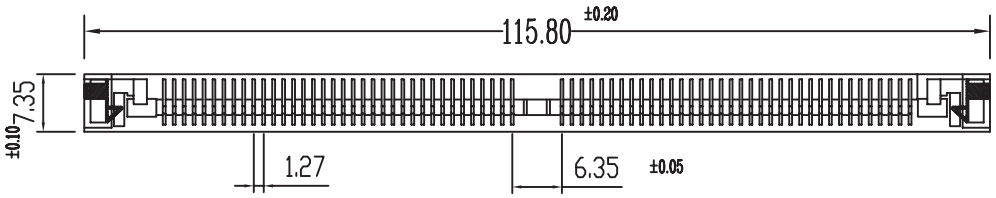

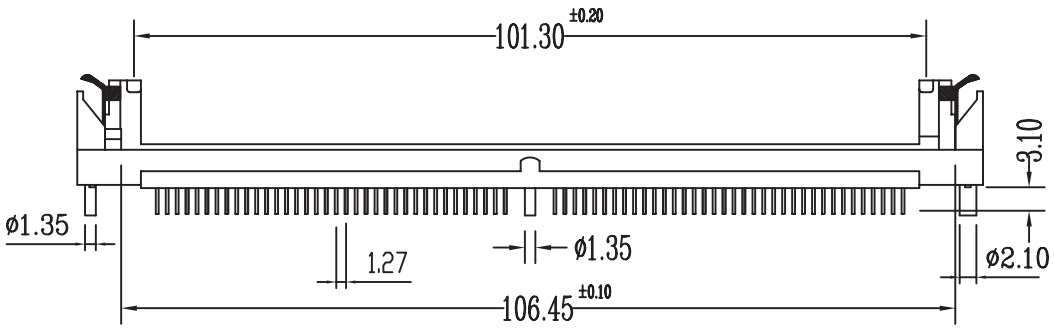

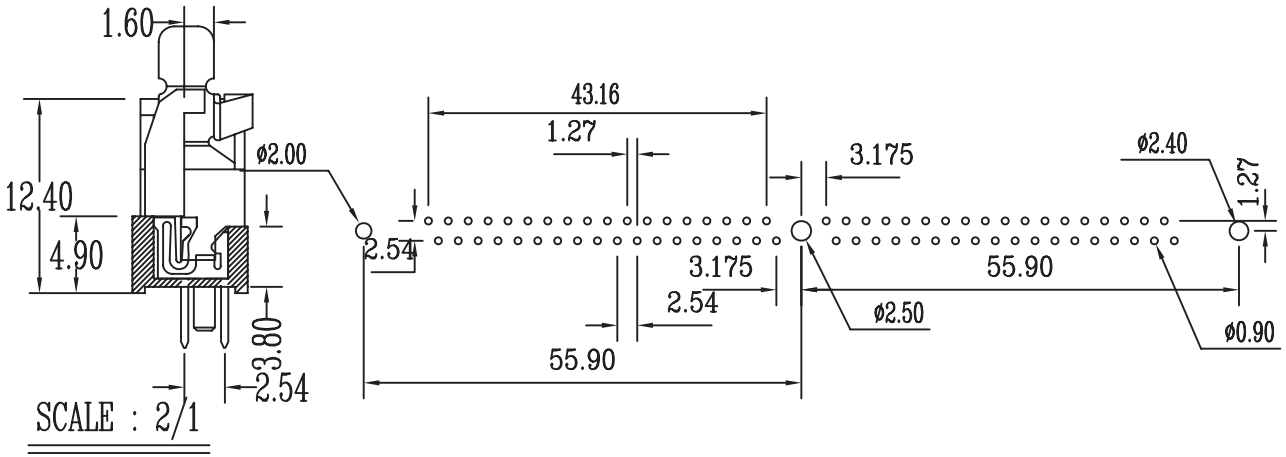

MATERIALS
* Bady : L.C.P. UL 94V-0
* Contact: Bronze
* Contact Plating: Tin plating over Nickel.
* Recommended industry standard modules (1.19mm[0.47in.] to 1.37mm[0.54in.] thick)

SPECIFICATIONS
* Contact rating: 1Amp
* Contact resistance: 30 Megohms Max.
* Insulation resistance: 1000 Megohms at 500 DC
* Dielectric strength:
  1.27mm[0.05in.] pitch-1000VAC RMS
  2.54mm[0.10in.] pitch-1500VAC RMS
* Capacitance: 1 pF Max.
* Vibration: MIL-STD-1344A
* Duridility: 30 Cycles
* Insertion force: 0g
* Withdrawal force: 0g
* Contact (normal) force: 150g Min.
* Contact retention force: 2 pounds per circuit Min.
* Operating and storage temperature: -40°C to +100°C
* Humidity: MIL-STD-202, Method 106D, 10 days
* Temperature soak: 85°C for 160 hours
* Thermal shock: 5 cycles, -40°C to +85°C per MIL-STD-202, Method 107E

RoHS Compliant

MORETHANALL PCB CONNECTORS Cable ASSEMBLIES
煜倫股份有限公司
www.morethanall.com

DRAWING BY CY		TOLERANCES ARE
CHECKED BY GENIUS		X. ±
UNIT / mm	SCALE 1 : 1	.X ±
		.XX ±
DATE		.XXX ±
		ANG ±
SIZE A4	PPOJECTION	

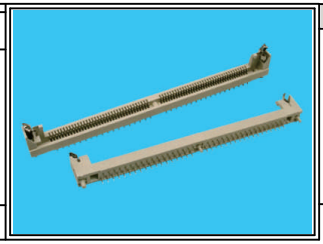

ORDER INFORMATION

HSM-D-1X72L-LF

SERIES
DIP 180°
72 WAY
LEFT KEY
LEADFREE

DESCRIPTION: SIMM SOCKET 1X72P VERTICAL LEFT TYPE