MATERIALS:

- HOUSING–NYLON FR–50
  BLACK COLOR, UL94V–0
- CONTACTS–0.35mm THICK. PHOS–BRONZE PLATED
  WITH HARD GOLD AND TIN/LEAD
  IN SOLDER AREA.

CAVITY CONFIRMS TO FCC RULES AND REGULATIONS
PART 68,SUBPART F.

MJW11–KX06P–0808–LF
LEADFREE

RoHS Compliant

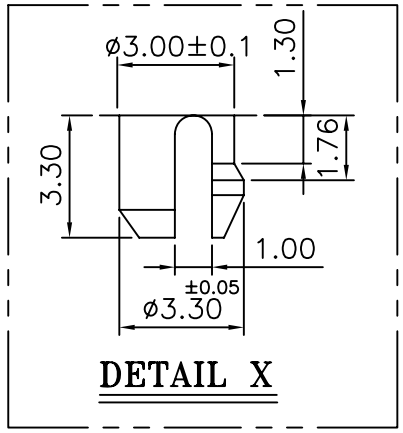

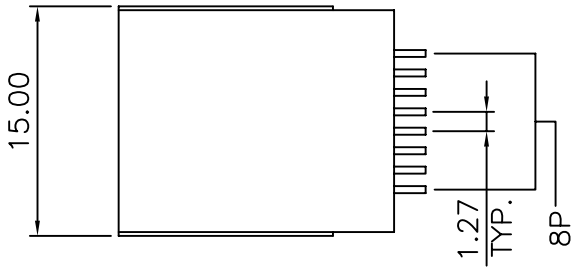

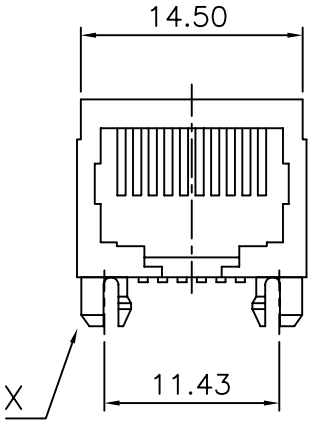

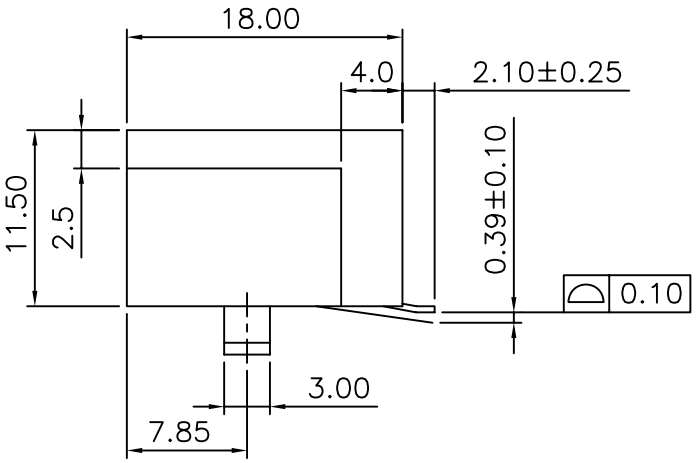

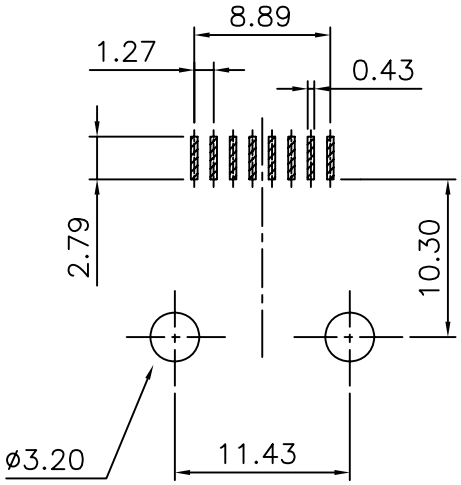

PC Board Layout
Ref.

MORETHANALL CONNECTORS ASSEMBLIES

煜倫股份有限公司

PART NO.	MJW11-KX06P-0808		
DWG NO.	MJW11-KX06P-0808	CHECKED BY	CY
FILE NO.		DRAWING BY	
UNIT / mm	SCALE 1 : 1	PROJECTION	

TOLERANCES ARE
.X ± 0.25
.XX ± 0.13
.XXX ± 0.05
AWG

DESCRIP TION:	8POSITION SIDE ENTRY, SMT TYPE VERY LOW PROFILE, SHIELDLESS PCB JACK		
AREA	REVISIONS	HK	DATE