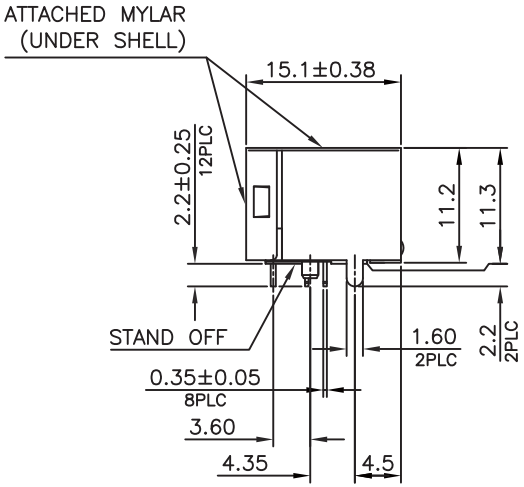

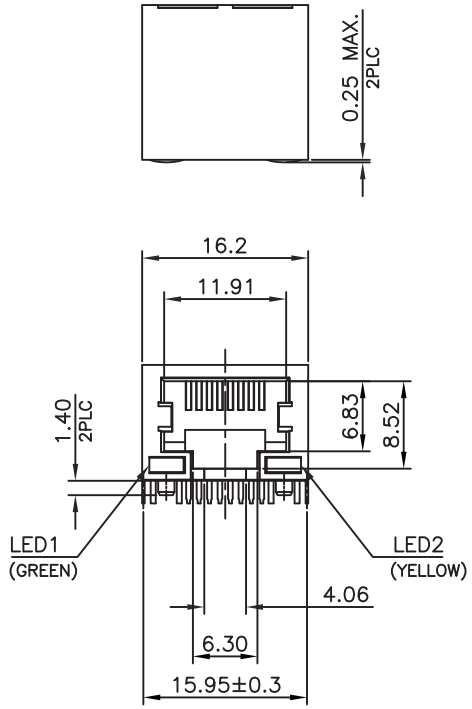

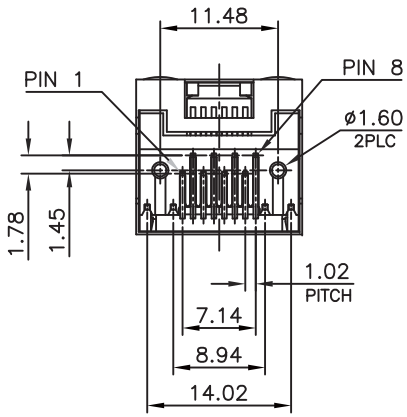

LED CHARACTERISTIC	
NO.	NODE
LED1	9+ —▷|— −10
LED2	11+ —▷|— −12

NOTE:

CAVITY CONFIRMS TO FCC RULES AND REGULATIONS PART 68, SUBPART F.

1. MATERIAL:
   - 1.1 HOUSING: PA46, WITH GLASS FIBER, UL94V−0, STANDARD COLOR−BLACK.
   - 1.2 INSERT HOUSING: PA46, WITH GLASS FIBER, UL94V−0, STANDARD COLOR−BLACK.
   - 1.3 CONTACTS: PHOSPHOR BRONZE.
   - 1.4 SHELL: BRASS.
   - 1.5 LED SOLDER TAIL: STEEL.

2. FINISH:
   - 2.1 CONTACTS: 0.152μm [6μ″] GOLD PLATED ON CONTACT AREA, GOLD FLASH ON SOLDER TAIL, 1.27μm [50μ″] MIN. NICKEL UNDERPLATED OVERALL.
   - 2.2 SHELL: 0.508μm [20μ″] MIN. NICKEL PLATED.
   - 2.3 LED SOLDER TAIL: 2.032μm [80μ″] MIN. TIN PLATED.

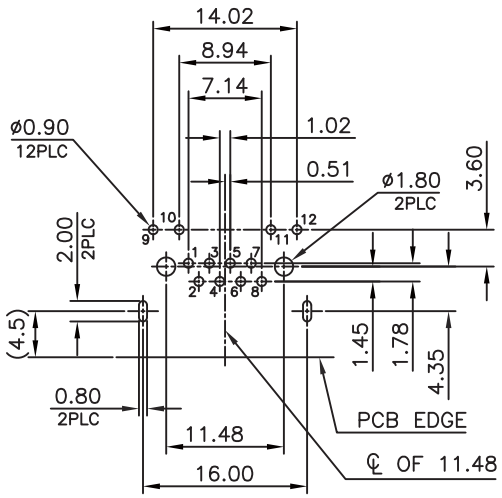

RECOMMENDED PCB LAYOUT
PCB THICKNESS: 1.6mm
TOLERANCE: ±0.05mm (TOP VIEW)

RoHS Compliant

MORETHANALL
PCB CONNECTORS
Cable ASSEMBLIES
煜倫股份有限公司
www.morethanall.com

DRAWING BY CY		TOLERANCES ARE
CHECKED BY GENIUS		X. ±
UNIT / mm	SCALE 1 : 1	.X ± 0.25
		.XX ± 0.13
DATE		.XXX ± 0.05
		ANG ±
SIZE A4	PPOJECTION	

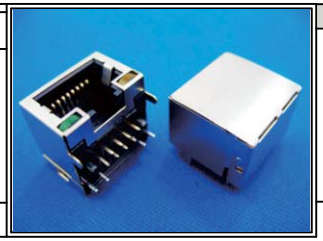

ORDER INFORMATION

MJF11L-KX06A4GY-0808

- SERIES
- BLACK
- 06u" GOLD
- NON EAR
- FRONT TAB 4.35mm
- LED1 / LED2
- GREEN / YELLOW
- 8P8C

DESCRIPTION: RJ45, REVERSE, FLAT PIN, WITH LED, SIDE ENTRY PCB JACK