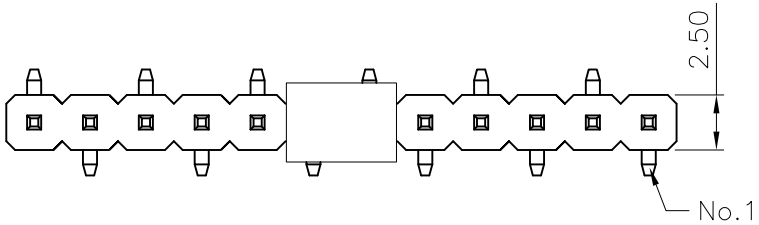

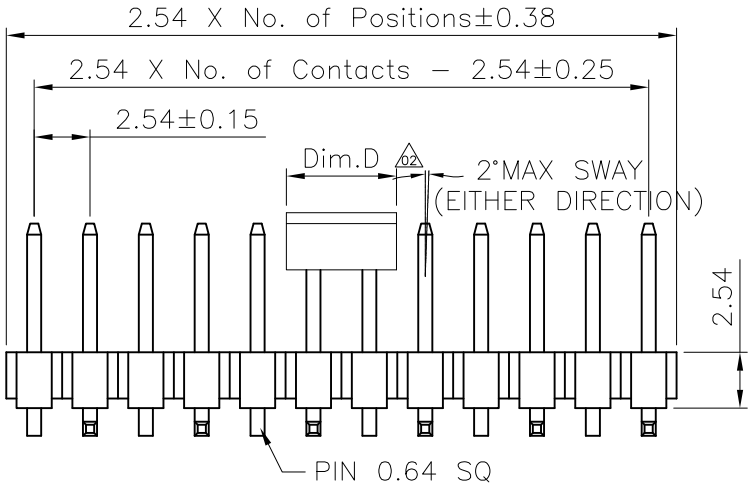

Dim.D	NOTE
5.00mm	02pins
6.50mm	03~40pins

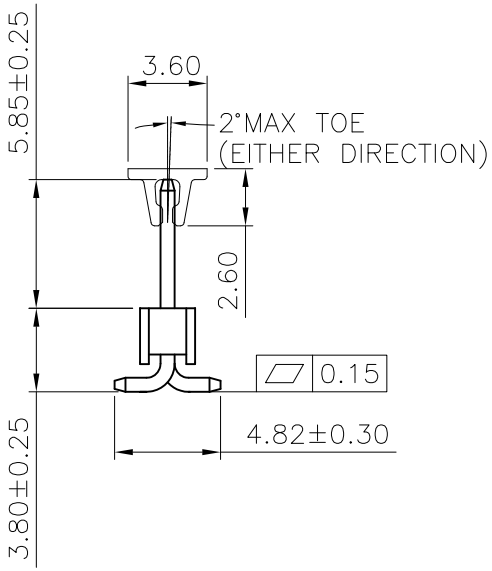

Specifications

Current Rating: 3.0Amp
Insulation Resistance: 1000MΩ Min.
Dielectric Withstanding Voltage: 600V AC
Contact Resistance: 20mΩ Max.
Operating Temperature:−40°C to +105°C

Materials

Contact Material: Brass
High Temperature Thermoplastic, UL 94V−0
Nylon (無鹵) or Equivalent Material

Recommended P.C.Board Layout
(Tolerance:±0.05)

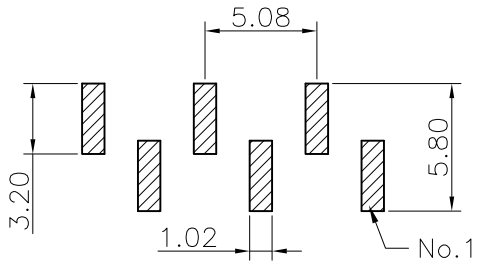

RoHS Compliant

MORETHANALL
PCB CONNECTORS
Cable ASSEMBLIES
煜倫股份有限公司
www.morethanall.com

DRAWING BY CY		TOLERANCES ARE
CHECKED BY GENIUS		X. ± 0.30 .X ± 0.25 .XX ± 0.15 .XXX ± 0.10 ANG ±
UNIT / mm	SCALE 1 : 1	
DATE		
SIZE A4	PPOJECTION	

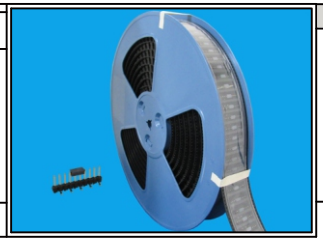

ORDER INFORMATION

H-V38X58CR-1XxxR-LF

- SERIES
- 180°SMT
- HIGH 3.8mm
- NON POST
- CONTACT 5.85mm
- CAP
- REEL
- 1X02:02WAY
- 1X40:40WAY
- R TYPE FOOT POSITION
- LEADFREE

DESCRIPTION: 2.54 PIN HEADER SINGLE ROW SMT TYPE CONNECTOR

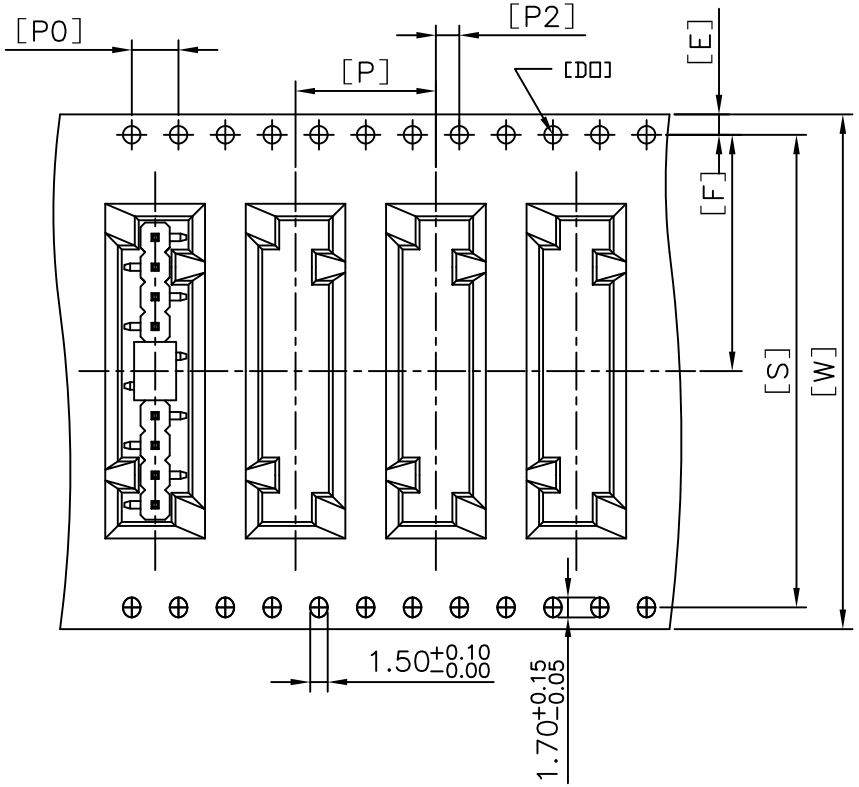

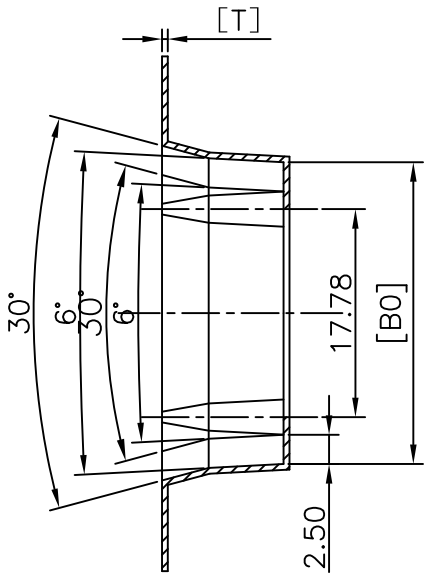

6 Reels/Box

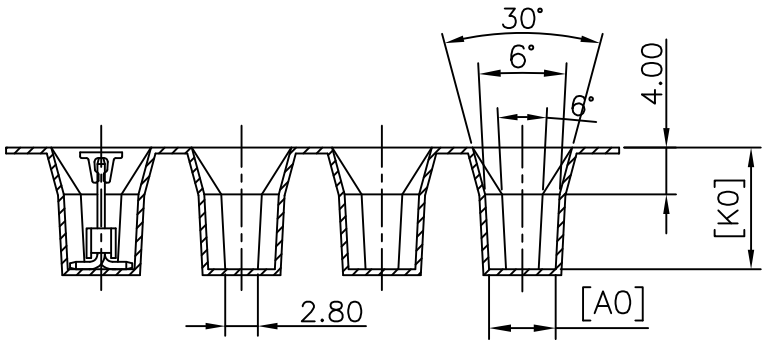

Notes:

1. Packing Conforms EIA−481−B Standards.
2. 10 sprocket hole pitch cumulative.
3. Carrier camber is within 1mm in 250mm.
4. Marterial:Black Polystyrene.
5. Packing length per 13"Reel: 7Meters.
6. Component load per 13"Reel: 500PCS.
7. All materials must meet Greenconn requirement for environment protection

W	44.00 +0.30 −0.30	T	0.50±0.05	Po	4.00±0.10	Ao	5.70±0.10
S	40.40±0.10	F	20.20±0.15	P2	2.00±0.15	Bo	25.80±0.10
E	1.75±0.10	P	12.00±0.10	Do	ø1.50 +0.10 −0	Ko	10.40±0.10

RoHS Compliant

MORETHANALL PCB CONNECTORS Cable ASSEMBLIES

煜倫股份有限公司

www.morethanall.com

DRAWING BY CY		TOLERANCES ARE
CHECKED BY GENIUS		X. ± 0.30 .X ± 0.25 .XX ± 0.15 .XXX ± 0.10 ANG ±
UNIT / mm	SCALE 1 : 1	
DATE		
SIZE A4	PPOJECTION	

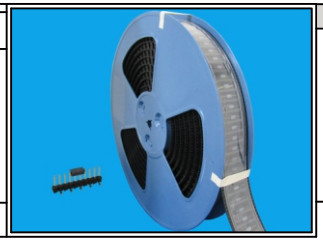

ORDER INFORMATION

H-V38X58CR-1XxxR-LF

- SERIES
- 180°SMT
- HIGH 3.8mm
- NON POST
- CONTACT 5.85mm
- CAP
- REEL
- 1X02:02WAY
- 1X40:40WAY
- R TYPE FOOT POSITION
- LEADFREE

DESCRIPTION: 2.54 PIN HEADER SINGLE ROW SMT TYPE CONNECTOR