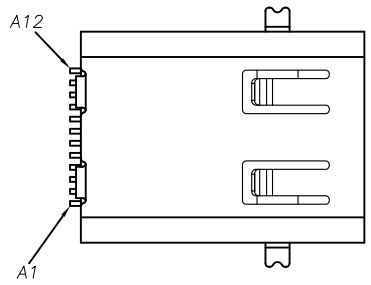

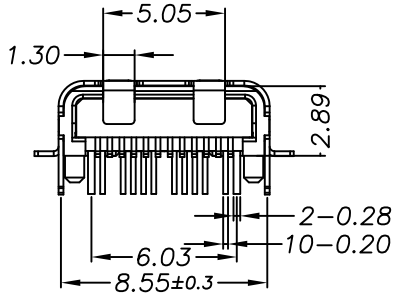

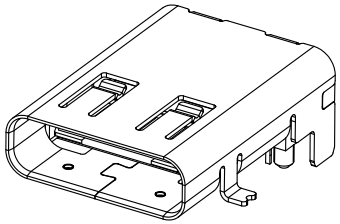

A1	GND	B12	GND
A2	SSTXP1	B11	SSRXP1
A3	SSTXN1	B10	SSRXN1
A4	VBUS	B9	VBUS
A5	CC1	B8	SBU2
A6	DP1	B7	DN2
A7	DN1	B6	DP2
A8	SBU1	B5	CC2
A9	VBUS	B4	VBUS
A10	SSRXN2	B3	SSTXN2
A11	SSRXP2	B2	SSTXP2
A12	GND	B1	GND
IN	SIGNAL NAMF	PIN	SIGNAL NAMF

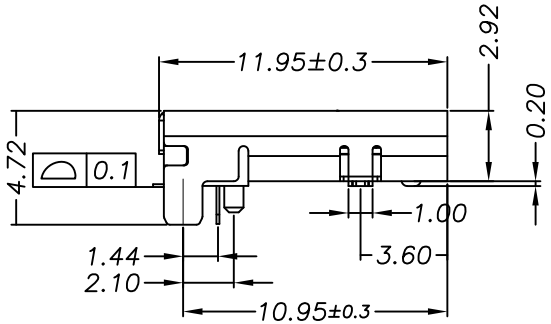

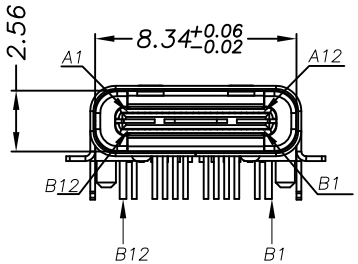

备注:

1.材质:

1.1胶芯：LCP+30%G.F

1.2端子：C18140，T=0.12mm；镀半金锡

1.3外壳：不锈钢，T=0.20mm；表面镀镍

1.4接地片：不锈钢，T=0.10mm；

1.5卡片：不锈钢，T=0.15mm；

2.主要特性:

2.1额定电流：3A

2.2接触阻抗：40mΩ MAX

2.3绝缘阻抗：100MΩ MIN 250V DC

2.4耐压测试：100V AC

2.5沾锡性：温度250±5℃，时间5±0.5s

2.6整体插入力：2.0kgf MAX

整体拔出力:0.8kgf MIN

2.7使用寿命：10000次

2.8工作温度：−30℃～+80℃

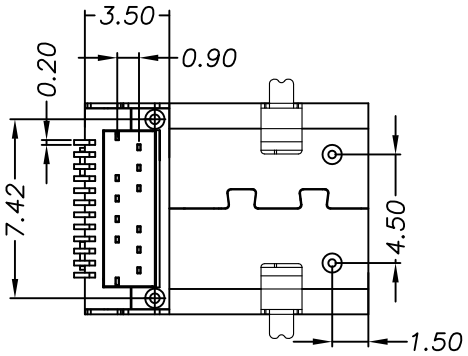

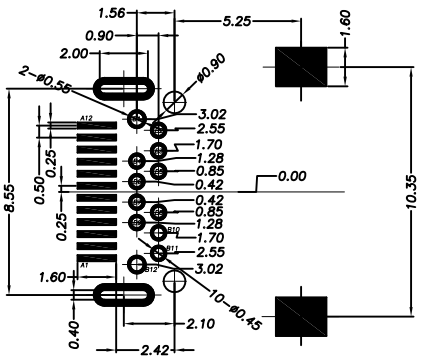

RECOMMENDED PCB LAYOUT(TOP VIEW)

RoHS Compliant

MORETHANALL
PCB CONNECTORS
Cable ASSEMBLIES
煜倫股份有限公司
www.morethanall.com

DRAWING BY CY	
CHECKED BY GENIUS	
UNIT / mm	SCALE 1 : 1
DATE	
SIZE A4	PPOJECTION

TOLERANCES ARE
X. ±
.X ± 0.30
.XX ± 0.25
.XXX ± 0.15
ANG ±

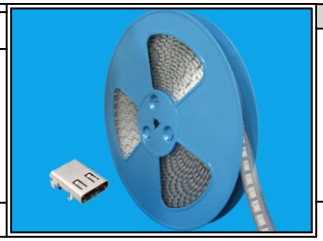

ORDER INFORMATION

USB-SRWEPMSR-24C-LF

SERIES
FEMALE
DIP 90°
90°SMT
EAR+POST
METAL FOOT
SPRING
REEL
24 PIN C TYPE
LEADFREE

DESCRIPTION: USB-TYPE-C母座板上加长L=11.95前插后贴

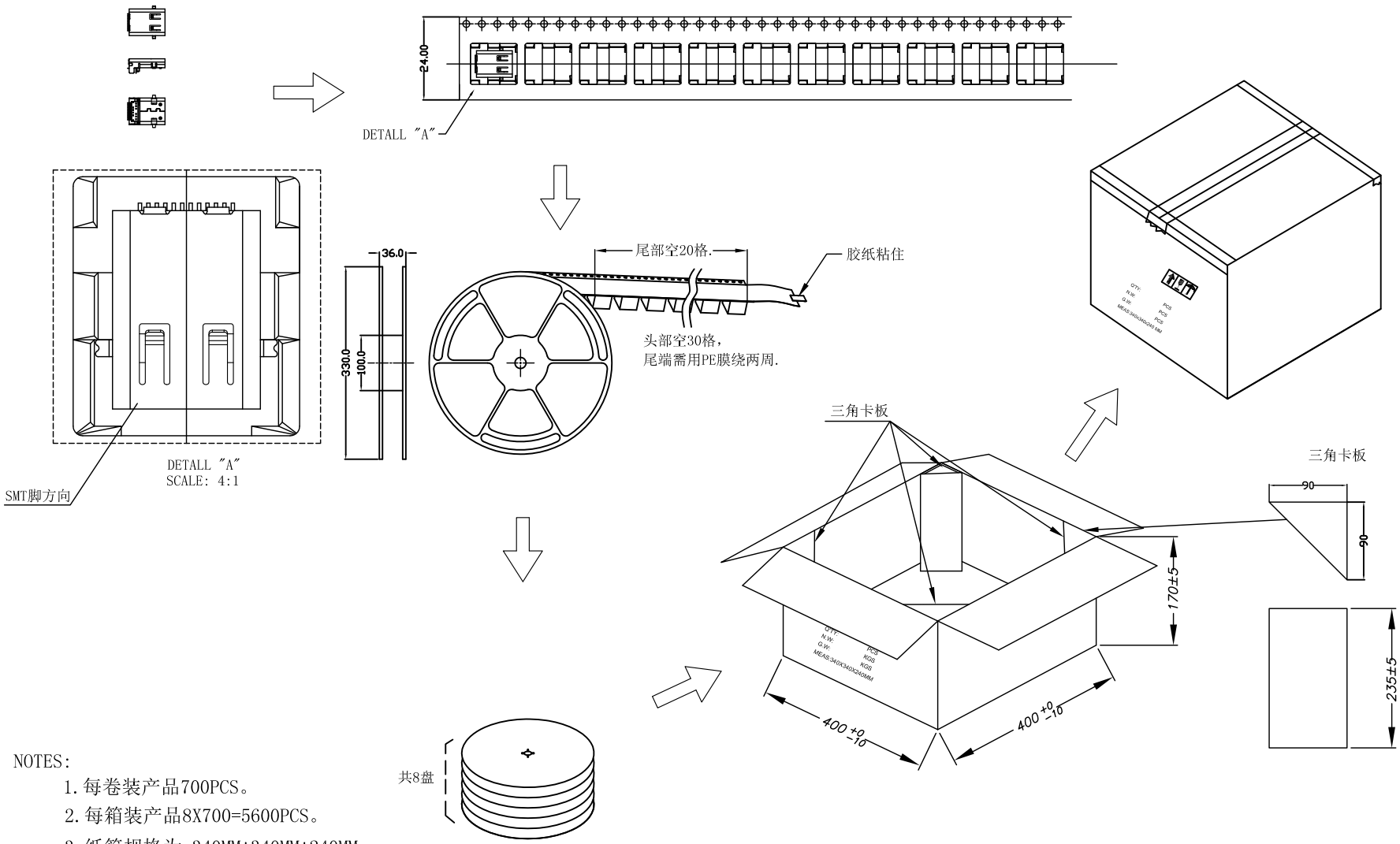

NOTES:

1. 每卷装产品700PCS。
2. 每箱装产品8X700=5600PCS。
3. 纸箱规格为:340MM*340MM*240MM

RoHS Compliant

MORETHANALL PCB CONNECTORS Cable ASSEMBLIES

煜倫股份有限公司

www.morethanall.com

DRAWING BY CY		TOLERANCES ARE
CHECKED BY GENIUS		X. ±
UNIT / mm	SCALE 1 : 1	.X ± 0.30
DATE		.XX ± 0.25
		.XXX ± 0.15
		ANG ±
SIZE A4	PPOJECTION	

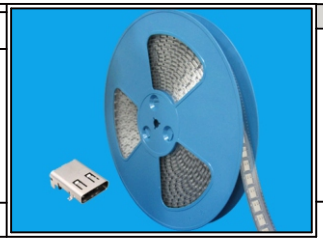

ORDER INFORMATION

USB-SRWEPMSR-24C-LF

- SERIES
- FEMALE
- DIP 90°
- 90°SMT
- EAR+POST
- METAL FOOT
- SPRING
- REEL
- 24 PIN C TYPE
- LEADFREE

DESCRIPTION: USB-TYPE-C母座板上加长L=11.95前插后贴