Notes: (Unless Otherwise Specified)

1. Waterproof Rate: IP67.
2. Recommend Panel Thickness: 0.8 to 6.0 mm.
3. Recommend Torque: 6~7 Kgf-cm.
4. Mating Cap
5. RoHS Compliant.

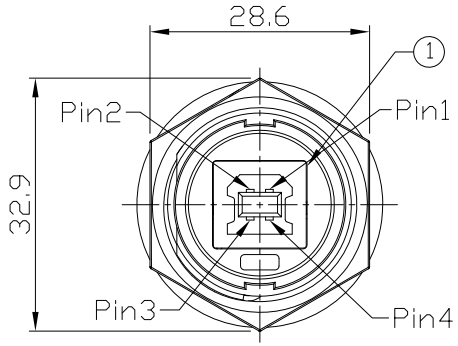

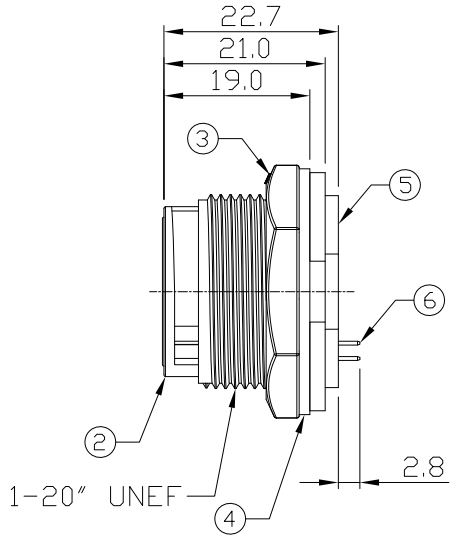

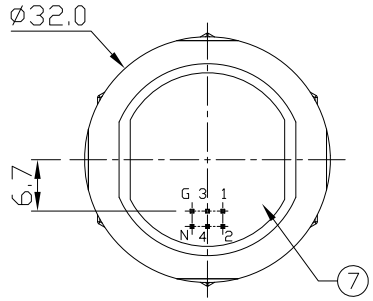

Item	Part Name	Material / Finish	Q'TY
7	Glue	Epoxy Color: Black	
6	Pin Header	Housing: Thermoplastic, Color: Black Contacts: Copper Alloy, Finish: Au Plated	1
5	PCB	FR-4 Color: Green	1
4	Gasket	Silicone Color: Black	1
3	Hex Nut	Thermoplastic Color: Black	1
2	Housing	Thermoplastic Color: Black	1
1	USB-B Receptacle	Housing: Thermoplastic, Color: Black Contacts: Copper Alloy, Finish: Au Plated Shell: Copper Alloy, Finish: Ni Plated	1

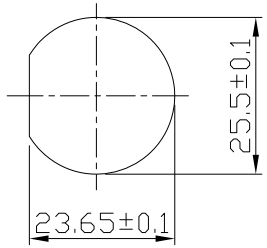

Recommend Panel Cut-Out

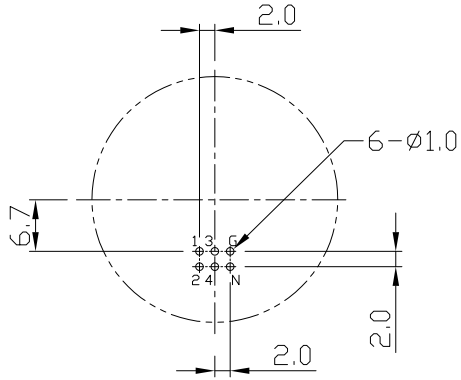

Recommend PCB Layout

RoHS Compliant

MORETHANALL PCB CONNECTORS Cable ASSEMBLIES

煜倫股份有限公司

www.morethanall.com

DRAWING BY CY	
CHECKED BY GENIUS	
UNIT / mm	SCALE 1 : 1
DATE	
SIZE A4	PPOJECTION

TOLERANCES ARE
X. ±
.X ± 0.50
.XX ± 0.20
.XXX ±
ANG ±

照片框

ORDER INFORMATION

WPUB-SDPBNOBKN-4B-LF

SERIES
FEMALE
DIP 180°
PANEL BACK
NUT
RING
BLACK
SNAP/ON
4 PIN B TYPE
LEADFREE

DESCRIPTION: USB-B Plastic C4 Panel Jack Dip Lock