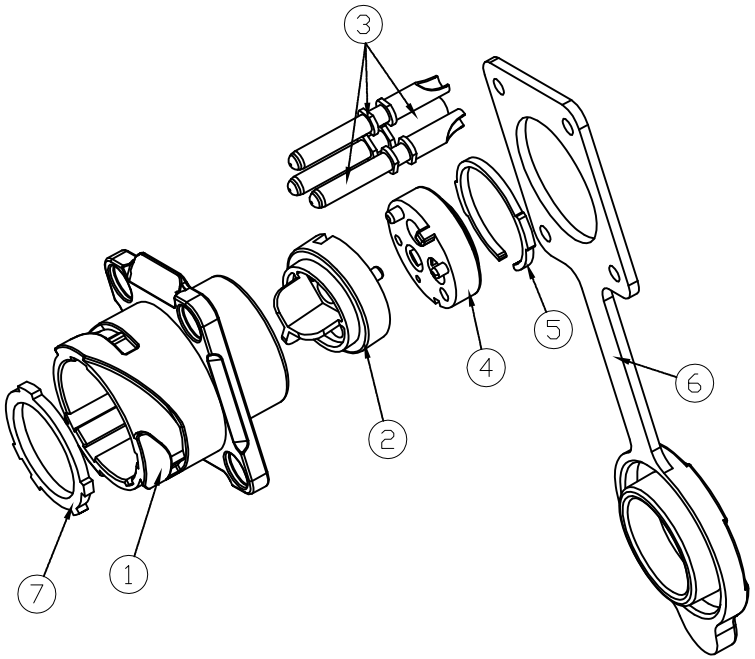

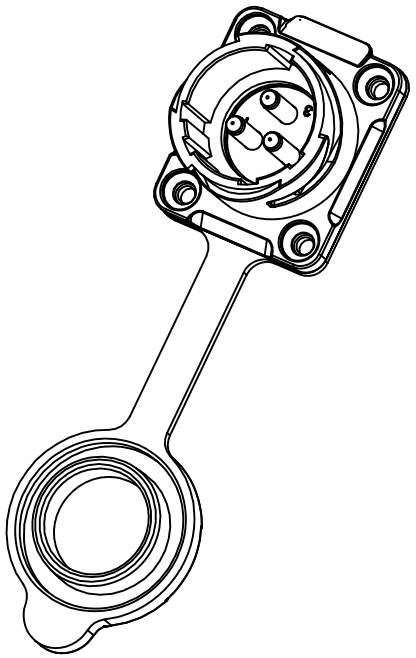

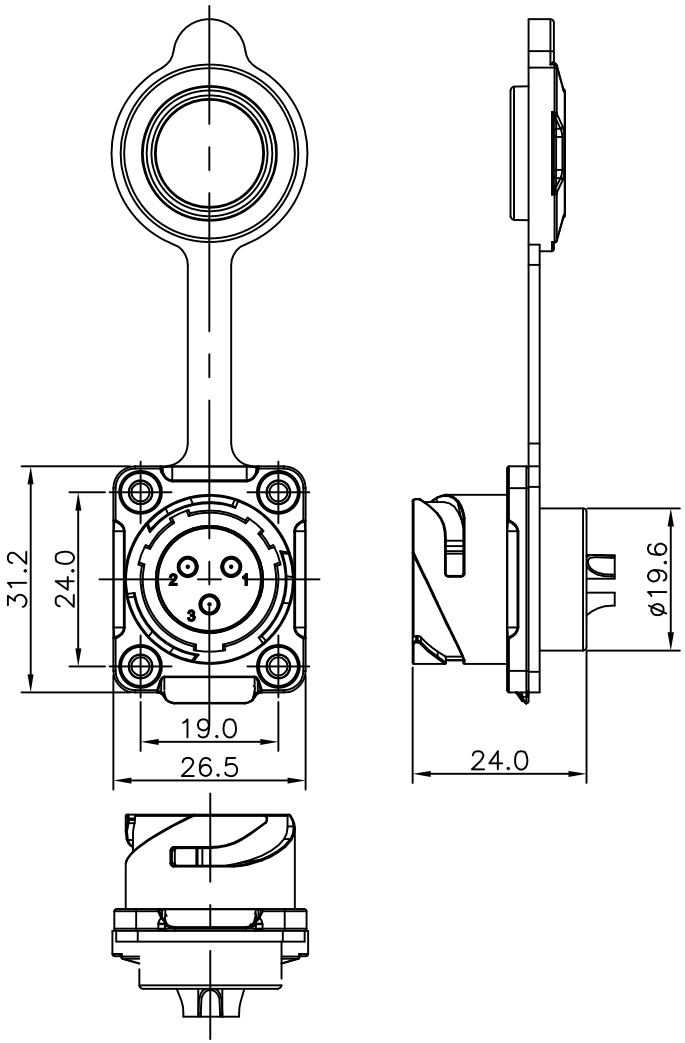

1		PBT357U	1
2	D	PBT357U	1
3			3
4	C	PBT357U	1
5			1
6			1
7			1

RoHS Compliant

MORETHANALL
PCB CONNECTORS
Cable ASSEMBLIES
煜倫股份有限公司
www.morethanall.com

DRAWING BY CY
CHECKED BY GENIUS
UNIT / mm | SCALE 1 : 1
DATE
SIZE A4 PPOJECTION

TOLERANCES ARE
X. ± 0.50
.X ± 0.38
.XX ± 0.25
.XXX ± 0.10
ANG ± 3°

照片框

ORDER INFORMATION

WPC20-PSPQCBK-03N-LF

SERIES
MALE
SOLDER
PANEL
SQUARE
COVER
BLACK
03 WAY
SNAP/ON
LEADFREE

DESCRIPTION: