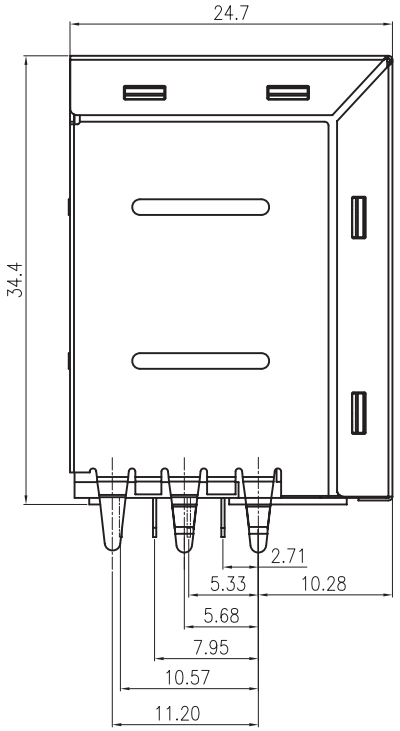

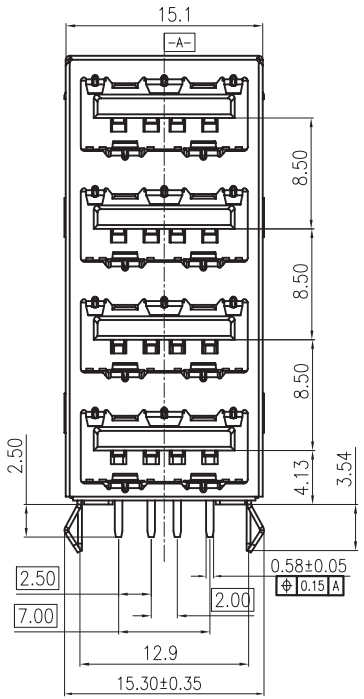

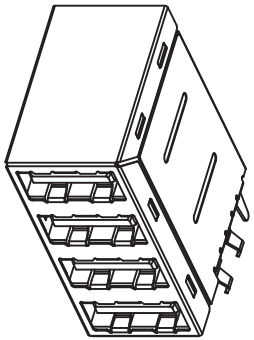

NOTES:

1.MATERIAL SPECIFICATION,
- 1-1.HOUSING: THERMOPLASTIC COLOR:BLACK
- 1-2.SPACER: THERMOPLASTIC COLOR:BLACK
- 1-3.SHELL: STAINLESS STEEL.
- 1-4.TERMINAL: COPPER ALLOY.

2.PLATING SPECIFICATION,
- 1-1.SHELL:Ni UNDERPLATED,Sn PLATED ON TAIL.
- 1-2.TERMINALS:Ni UNDERPLATED, Sn ON TAIL. GOLD PLATING ON CONTACT AREA.

3.ELECTRICAL PERFORMANCE,
- 3-1.CURRENT RATING:1Ampere
- 3-2.CONTACT RESISTANCE:30Milliohms MAX.
- 3-3.INSULATION RESISTANCE:1000Megohms MIN
- 3-4.DIELECRIC WITHSTAND VOLTAGE:750VAC MIN

4.HF COMPLIANT.

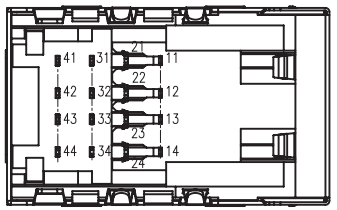

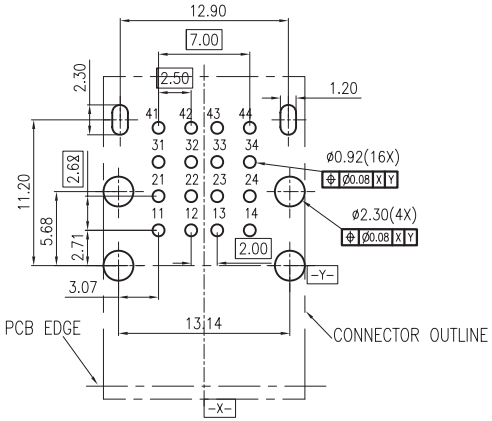

TOP VIEW

PCB THICKNESS:1.57mm.

DEFAULT TOLERANCE ±0.05

RoHS Compliant

MORETHANALL PCB CONNECTORS Cable ASSEMBLIES

煜倫股份有限公司

www.morethanall.com

DRAWING BY CY		TOLERANCES ARE
CHECKED BY GENIUS		X. ± .X ± 0.35 .XX ± 0.25 .XXX ± 0.15 ANG ±
UNIT / mm	SCALE 1 : 1	
DATE		
SIZE A4	PPOJECTION	

照片框

ORDER INFORMATION

USBD1-FRXBK-4A-LF

SERIES
4 LAYER
FEMALE
DIP 90°
NON SPRING
BLACK
4 PIN A TYPE
LEADFREE

DESCRIPTION: 4 LAYERS USB