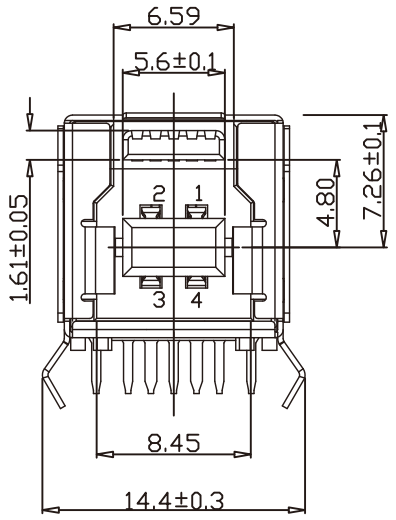

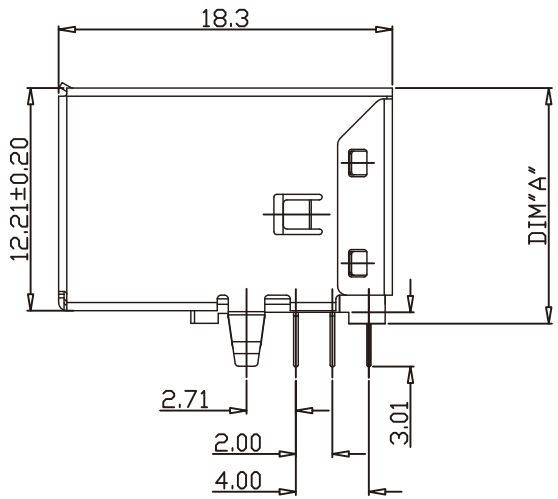

NOTE:
1.MATERIAL:
1.1 INSULATOR: LCP UL94V-0 BLUE
1.2 CONTACT: 1~4PIN,C5191-H(T=0.20mm)
5~9PIN,C2680-H(T=0.20mm)
1.3 SHELL: FRONT SHELL,BRASS(T=0.30mm)
COVER SHELL,SPCC(T=0.20mm)
2.ELECTRICAL CHARACTERISTICS;
2.1 CONTACTRESISTANCE: 30mΩ Max
2.2 CONTACT CURRENT RATING: 1.8A
2.3 DIELECTRIC WITHSTANDING VOLTAGE: 500 V R.M.S.
2.4 INSULATION RESISTANCE 1000 MEGOHMS MIN.
2.5 OPERATING TEMPEROTURE: -40°C ~ 85°C
3 MECHANICAL CHARACTERISTICS:
3.1 MATING FORCE: 35 N Max
3.2 UNMATED FORCE: 10 N Min INITIAL; 8 N Min AFTER TEST
3.3 DURABILITY: 5,000 CYCLES
4.PLATING
4.1 TERMINAL CONTACT: (SEE TAB) GOLD PLATING ALL OVER 50u" MIN NICKEL AND 80u"MIN Matte Tin ALL OVER 50u" MIN NICKEL IN SOLDER AREA
4.2 SHELL: 150U" MIN.NICEL OVER 20U"MIN BRASS.

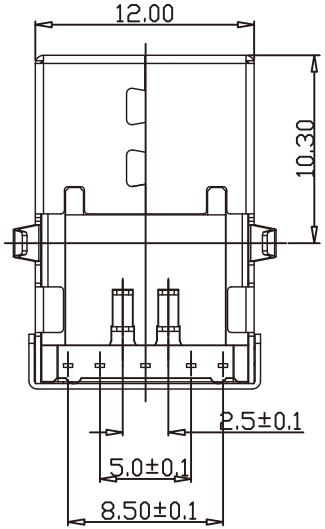

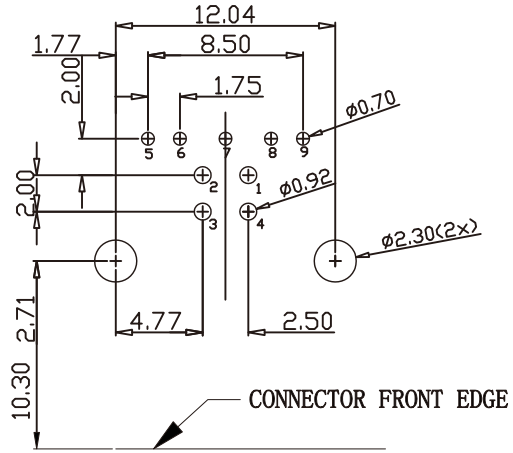

RECOMMANDED PCBA LAYOUT

RoHS Compliant

MORETHANALL
PCB CONNECTORS
Cable ASSEMBLIES
煜倫股份有限公司
www.morethanall.com

DRAWING BY CY		TOLERANCES ARE
CHECKED BY GENIUS		X. ±
UNIT / mm	SCALE 1 : 1	.X ±
		.XX ±
DATE		.XXX ±
		ANG ±
SIZE A4	PPOJECTION	

照片框

ORDER INFORMATION

USB-SRxx-9B-LF

SERIES
FEMALE
DIP 90°
BL:BLUE
BK:BLACK
WH:WHITE
9 PIN B TYPE
LEADFREE

DESCRIPTION: