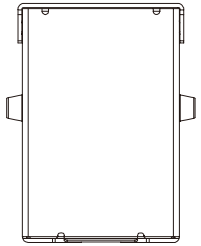

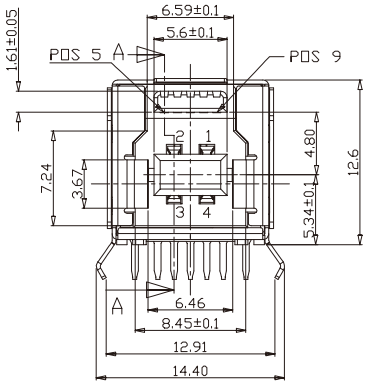

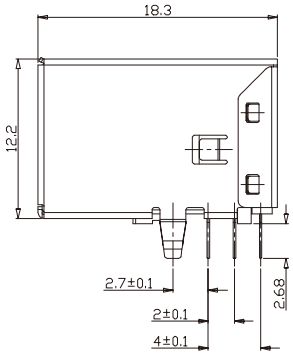

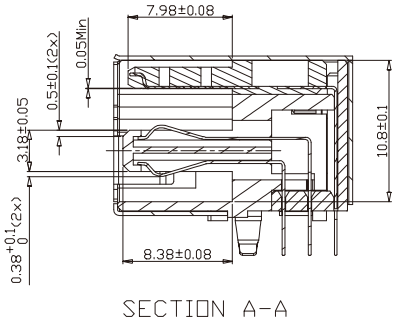

SECTION A-A

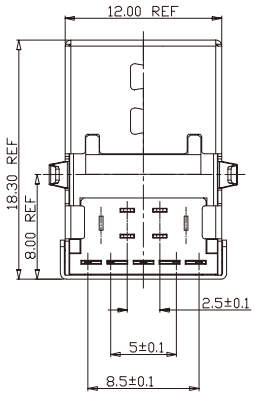

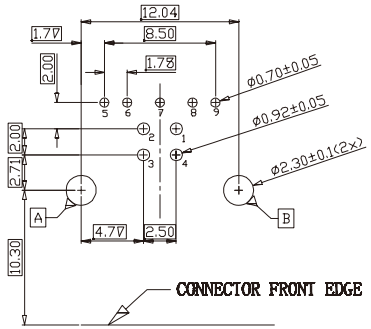

RECOMMANDED PCBA LAYOUT

NOTE

ELECTRICAL CHARACTERISTICS;
- CONTACTRESISTANCE 30mΩ MAXIMUM
- CONTACT CURRENT RATING 1 5A
- DIELECTRIC WITHSTANDING VOLTAGE 500 V R M S
- INSULATION RESISTANCE 1000 MEGOHMS MIN
- OPERATING TEMPEROTURE -40° C ~ 85° C

MECHANICAL CHARACTERISTICS
- MATING FORCE 3 57kg MAX
- UNMATING FORCE 1 02kg MIN

RoHS Compliant

MORETHANALL PCB CONNECTORS Cable ASSEMBLIES

煜倫股份有限公司

www.morethanall.com

DRAWING BY CY		TOLERANCES ARE
CHECKED BY GENIUS		X. ±
UNIT / mm	SCALE 1 : 1	.X ±
		.XX ±
DATE		.XXX ±
		ANG ±
SIZE A4	PPOJECTION	

照片框

ORDER INFORMATION

USB-SRBK-9B-LF

- SERIES
- DIP 90°
- FEMALE
- BLACK
- 9 PIN B TYPE
- LEADFREE

DESCRIPTION: