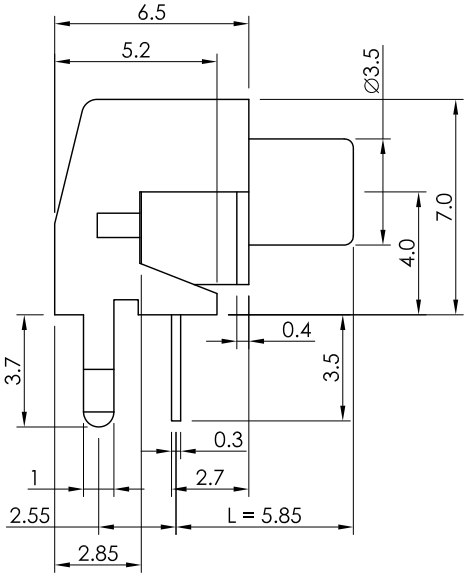

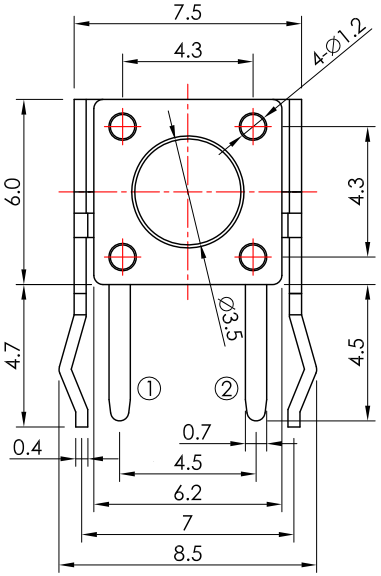

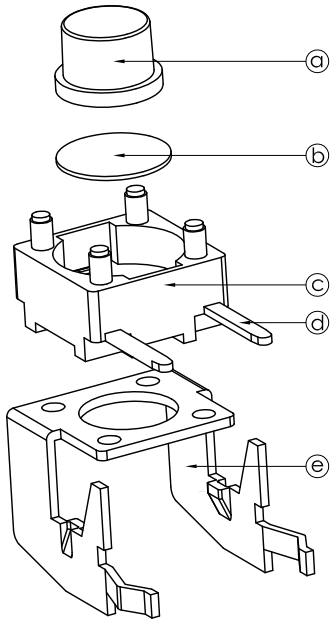

P.C.B. LAYOUT

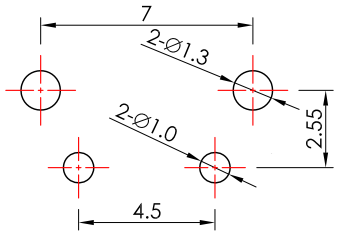

SCHEMATIC

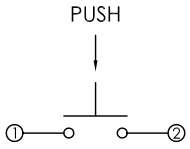

OPERATING FORCE
250

SPECIFICATION

Rating: 50mA 12V DC.
Travel: 0.25±0.1mm.
Contact resistance: 50mΩ Max.(initial)
Insulation resistance: 100MΩ Min. at 100V DC.
Withstand voltage: 250V AC for 1 minute.
Operating force: 250±50g.
Life: 100,000 Cycles.
Soldering temperature: 250°C Max. for 3 sec.
Soldering time: 1 time only.
Note1: Unwashable, don't be immerged by epoxy and organic solvent.
Note2: Please check the actual size, do not scale the drawing page.

MATERIAL

Stem: PPA, black. ——— ⓐ
Spring: CuAg. ——— ⓑ
Base: PPA, black. ——— ⓒ
Terminal: Brass, Ag plated. ——— ⓓ
Cover: SPCC, Tin plated. ——— ⓔ

STORAGE METHOD

After opening the bag of the switches, please include a desiccant into the bag, then seal it to avoid product oxidation.
打開包裝袋後，請在袋中加入乾燥劑並「密封」，避免產品氧化。

RoHS Compliant

MORETHANALL
PCB CONNECTORS
Cable ASSEMBLIES
煜倫股份有限公司
www.morethanall.com

DRAWING BY CY		TOLERANCES ARE
CHECKED BY GENIUS		X. ±
UNIT / mm	SCALE 1 : 1	.X ± 0.30
		.XX ± 0.20
DATE		.XXX ±
		ANG ±
SIZE A4	PPOJECTION	

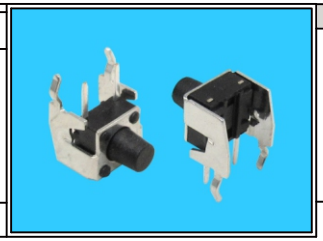

ORDER INFORMATION

TSW66-R58-250-LF
SERIES
5.85mm DIP 90°
250g
LEADFREE

DESCRIPTION: