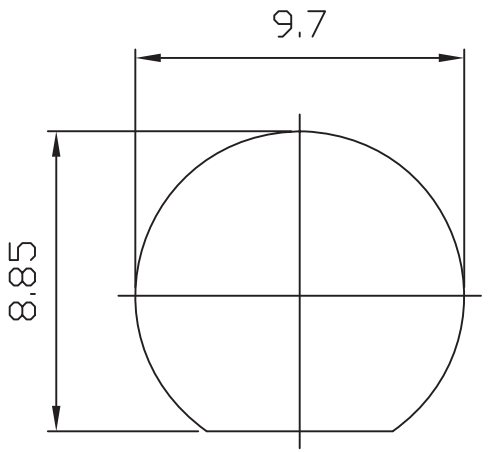

RECOMMENDED
MOUNTING HOLE

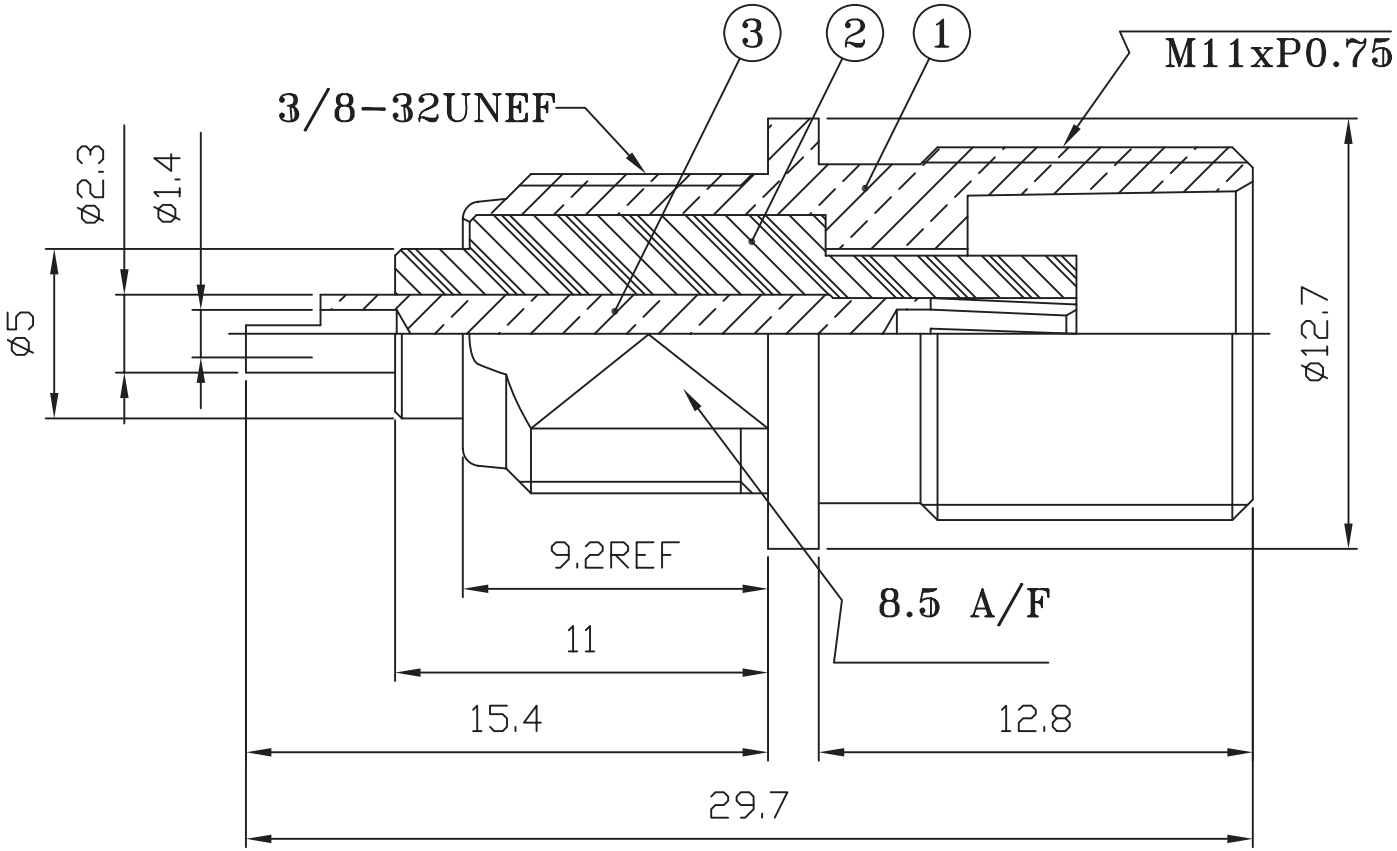

NO	DESCRIPTION	MATERIAL	FINISH	QTY
3	CONTACT PIN	BRASS	GOLD	1
2	INSULATOR	DELRIN	WHITE	1
1	BODY	BRASS	NICKEL	1

RoHS Compliant

MORETHANALL
PCB CONNECTORS
Cable ASSEMBLIES
煜倫股份有限公司
www.morethanall.com

DRAWING BY CY
CHECKED BY GENIUS
UNIT / mm | SCALE 1 : 1
DATE
SIZE A4 | PPOJECTION

TOLERANCES ARE

0.5-5	=±0.2
5-30	=±0.4
30-120	=±0.6
120-315	=±1
315-1000	=±1.6
1000-2000	=±2.4

照片框

ORDER INFORMATION

TNC-JSPA-50-LF
SERIES
SOLDER
JACK
PANEL FRONT
50 OHM
LEADFREE

DESCRIPTION: BULKHEAD RECEPT JACK