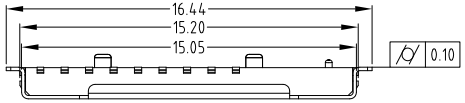

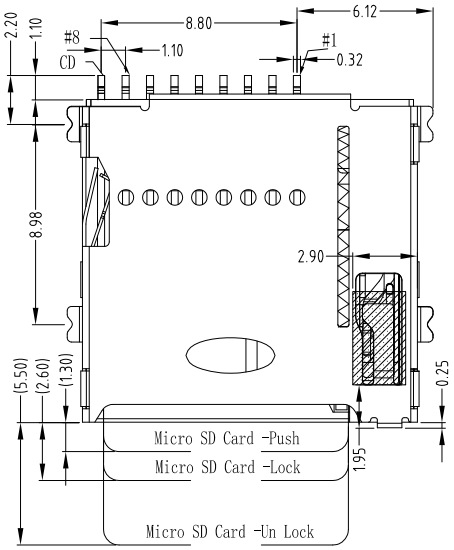

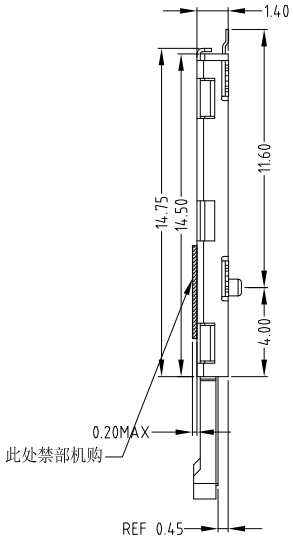

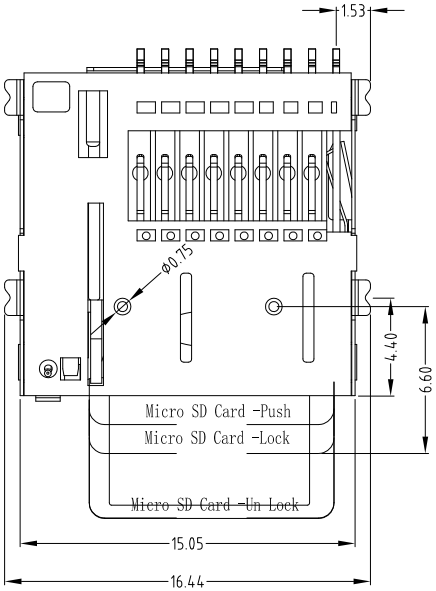

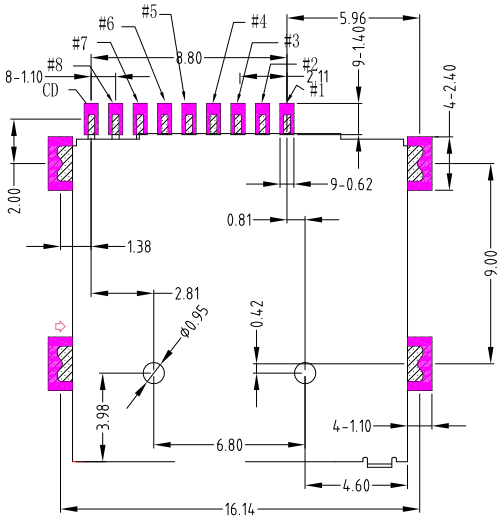

PCB LAYOYT

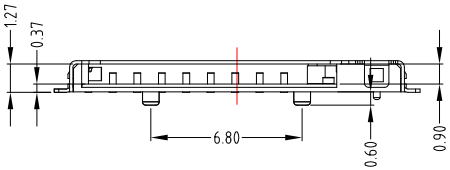

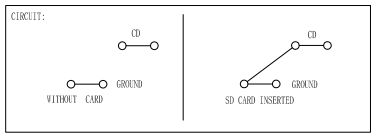

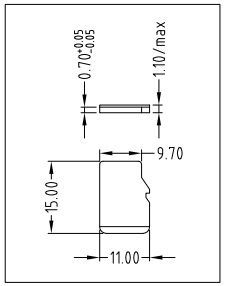

PIN NO.	PIN ASSIGNMENT	
1#	DAT2	信号
2#	CD/DAT3	信号
3#	CMD	数据输入
4#	VDD	电压/电源
5#	CLK	钟
6#	VSS	接地
7#	DAT0	信号
8#	DAT1	信号

SPECIFICATION

Electrical :

1. Rating: 0.5A , 5.0V AC/DC
2. Contact Resistance: 100 mΩ Max.
3. Insulation Resistance: 1000 MΩ Min.
4. Operating Temperature: -40°C ~85°C

Material:

1. Housing: LCP
2. Contact: Phosphor Bronze
3. Shell: SUS

Finish:

1. Contact: Plated Gold in Mating Area ;
   Gold Plated on Solder Balls ;
   Nickel under plated overall
2. Shell: Nickel under Plated surface layer

RoHS Compliant

MORETHANALL PCB CONNECTORS Cable ASSEMBLIES

煜倫股份有限公司

www.morethanall.com

DRAWING BY CY	
CHECKED BY GENIUS	
UNIT / mm	SCALE 1 : 1
DATE	
SIZE A4	PPOJECTION

TOLERANCES ARE

Up to 5	±0.2
Above 5 ~ 15	±0.3
Above 15 ~ 30	±0.4
Above 30 ~ 50	±0.5
Angle	±0.3°

照片框

ORDER INFORMATION

TFC-WPBP06-08-LF

SERIES
90°SMT
PUSH PUSH
BOTTOM CONTACT
POST 6.8mm
08WAY
LEADFREE

DESCRIPTION: T-FLASH PUSH PUSH H1.40