線材剌破面

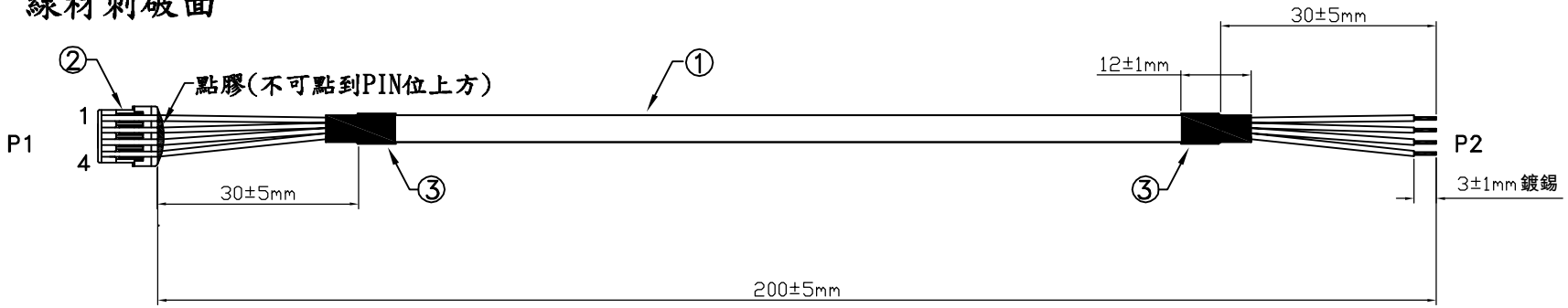

本產品符合"ROHS"環保標準.所使用材料均為相當品.

ITEM	DESCRIPTION	Q'TY	REMARK
7			
6			
5			
4			
3	熱縮套管:L=12MM	2PCS	
2	0.8MM 剌破式	1PCS	
1	Wire, 4C, 32 AWG, 150V, 80C, 2.0 mm, spiral shield,VW-1, PVC, 66A	1PCS	

PIN OUTS

P1	P2
1	OPEN
2	OPEN
3	OPEN
4	OPEN

RoHS Compliant

MORETHANALL PCB CONNECTORS Cable ASSEMBLIES

煜倫股份有限公司

www.morethanall.com

DRAWING BY CY		TOLERANCES ARE
CHECKED BY GENIUS		X. ±
UNIT / mm	SCALE 1 : 1	.X ±
		.XX ±
DATE		.XXX ±
		ANG ±
SIZE A4	PPOJECTION	

照片框

ORDER INFORMATION

SURX1-040032R1-F20C-LF

SERIES
04 WAY
32 AWG
ROUND CABLE
FEMALE
200mm
LEADFREE

DESCRIPTION: