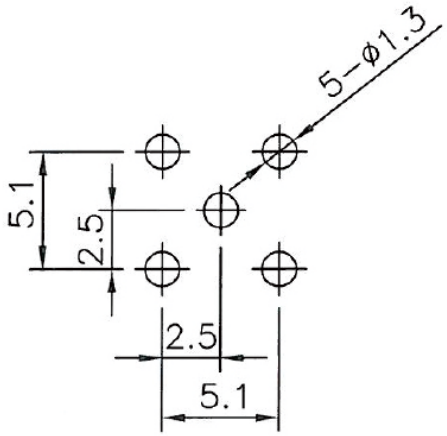

PCB MOUNTING HOLE

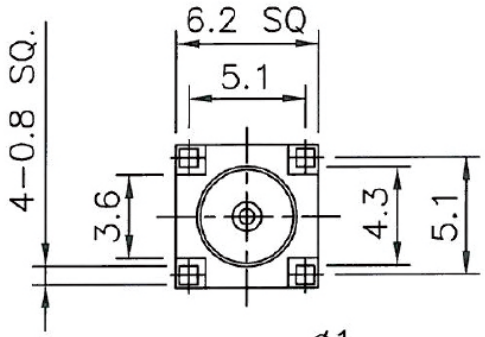

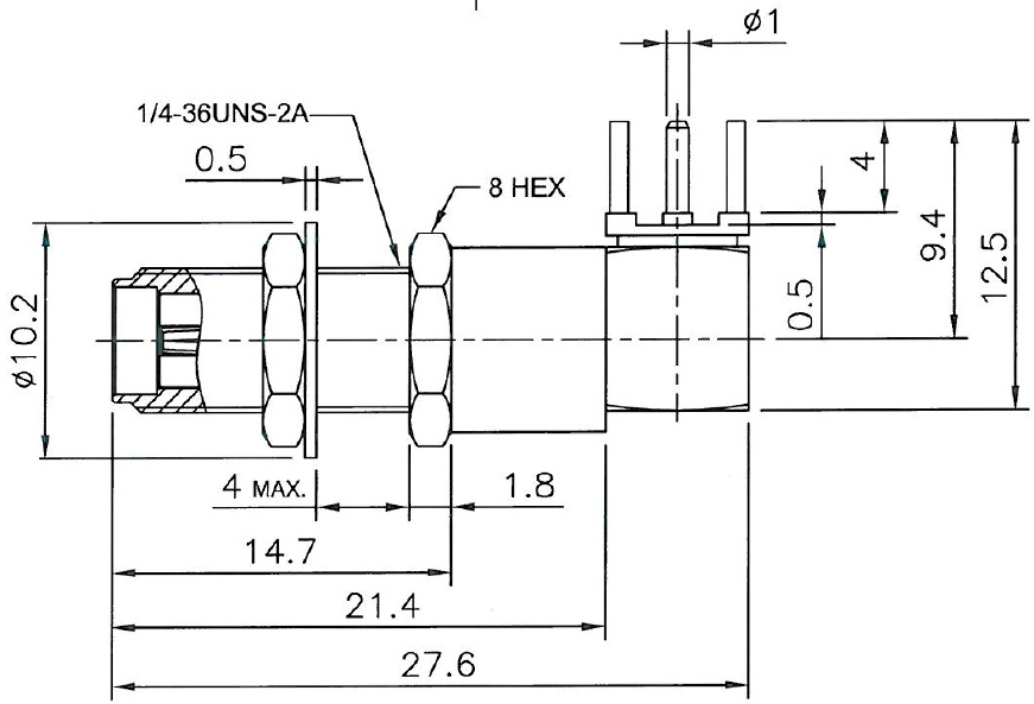

ELECTRICAL PERFORMANCE :
1.NOMINAL IMPENDENCE : 50 Ohms
2.FREQUENCY RANGE : 0~6GHz
3.DIELECTRIC WITHSTANDING VOLTAGE : 750Vrms minimum

DESCRIPTION	MATERIAL	FINISH	Q'TY
HEX. NUT	BRASS	GOLD	2
WASHER	BRASS	GOLD	1
INSULATOR	PTFE	NATURAL	1
INSULATOR	PTFE	NATURAL	1
BODY	BRASS	GOLD	1
CONTACT PIN	BE COPPER	GOLD	1
HOUSING	BRASS	GOLD	1

RoHS Compliant

MORETHANALL PCB CONNECTORS Cable ASSEMBLIES
煜倫股份有限公司
www.morethanall.com

DRAWING BY CY
CHECKED BY GENIUS
UNIT / mm | SCALE 1 : 1
DATE
SIZE A4 PPOJECTION

TOLERANCES ARE
X. ±
.X ± 0.50
.XX ± 0.25
.XXX ±
ANG ±

照片框

ORDER INFORMATION

SMA-JRL27PBNWN-50-LF

SERIES
JACK
DIP 90°
LONG 27.6mm
PANEL
BACK
NUT
WASHER
NUT
50WAY
LEADFREE

DESCRIPTION: