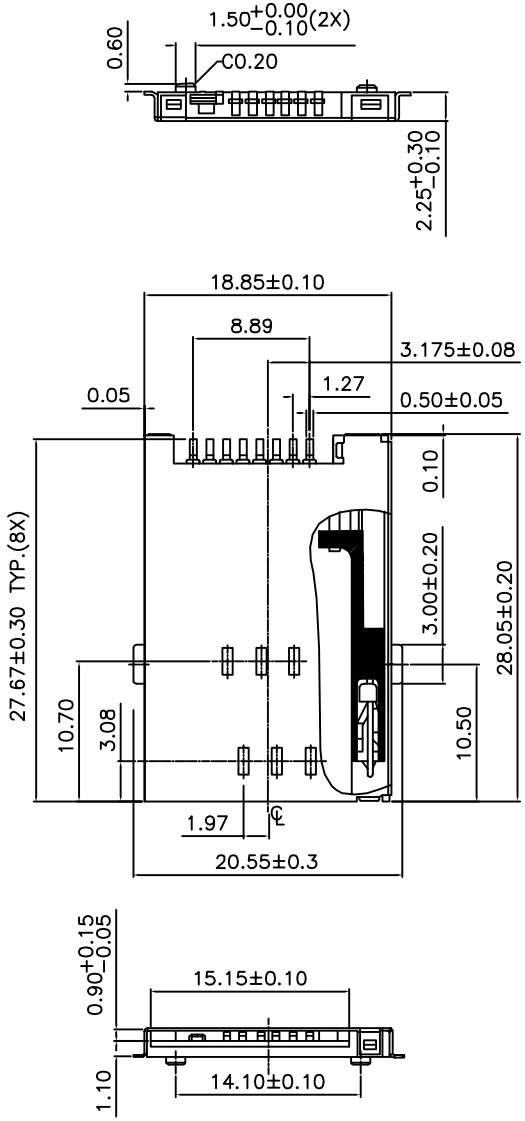

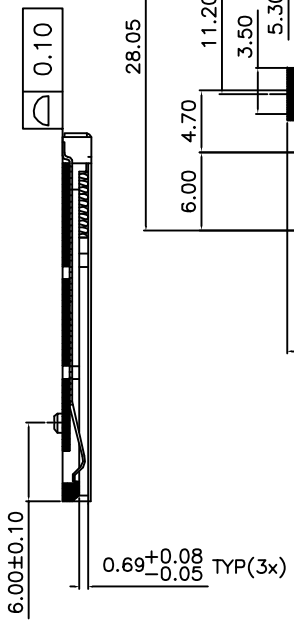

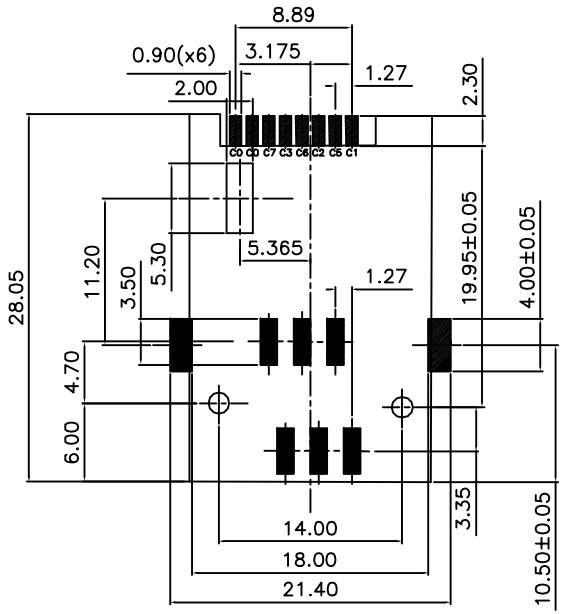

RECOMMEND PCB LAYOUT

1.Material And Finish:

Insulator:LCP +30% Glass Filled,UL 94V−0,Black
CAM Housing: Nylon−9T +30% Glass Filled,UL 94V−0,Black
Contact Material: Phosphor Bronze,C5191R−ET, t=0.15 mm
Switch Terminal Material: Phosphor Bronze,C5191R−EH,T=0.15 mm
Contact Area Plated: 15u" Gold Plated Over 50u" Nickel
Solder Area Plated: 100u" Tin Plated Over 50u" Nickel
Switch Terminal Contact Area Plated:2u" Gold Plated Over 50u" Nickel
Switch Terminal Solder Area Plated:100u" Tin Plated Over 50u" Nickel
Wire Spring: SUS304−WPB,Nickel Plated
Shell Material:Stainless Steel SUS 301,T=0.2 mm
Shell Solder Area Plated:2u" Selective Gold Plated For One Side
CAM Pin: SUS304−WPB,Nickel Plated

2.SPECIFICATION:

Current Rating: 0.5A AC/DC Max.
Contact Resistance: 100m ohms Max.
Insulation Resistance: 500m ohms Min.
Dielectric Withstanding Voltage:250 V AC/DC
Insertion Cycles: 5000 Cycles Min.
Operation Temperature:−40°C To +85°C

Pin No.	Pin Assignement
C1	VCC
C2	RST
C3	CLK
C5	GND
C6	RFU
C7	I/O

RoHS Compliant

MORETHANALL PCB CONNECTORS Cable ASSEMBLIES
煜倫股份有限公司
www.morethanall.com

DRAWING BY CY		TOLERANCES ARE
CHECKED BY GENIUS		X. ± .X ± 0.30 .XX ± 0.25 .XXX ± 0.15 ANG ± 2°
UNIT / mm	SCALE 1 : 1	
DATE		
SIZE A4	PPOJECTION	

照片框

ORDER INFORMATION

SCP-W14PASxx-06-LF

SERIES
90°SMT
POST TO POST 14.10mm
SWITCH CLOSED POST
S15:SEMI GOLD 15u"
S30:SEMI GOLD 30u"
BLANK:GOLD FLASH
06 WAY
LEADFREE

DESCRIPTION: SIM CARD P-P TYPE