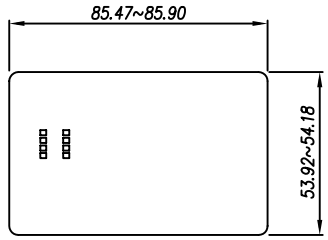

Thickness 0.68~0.84 mm
Contact Specification Refer to EMV

1. MATERIAL :

BASE	:	PA-9T.UL94V-0
COVER	:	PA-9T.UL94V-0
CLUTCH	:	PA46.UL94V-0
TERMINAL	:	COPPER ALLOY

2. SPECIFICATION

VOLTAGE RATING : 50V DC MAX
CURRENT RATING : 0.5A MAX
OPERATING TEMPERATURE : −20°C ~ +80°C
INSULATION RESISTANCE: 1000 MΩ Min
CONTACT RESISTANCE: 100 mΩ Max

3. SWITCH TYPE : OPEN
4. DURABILITY :

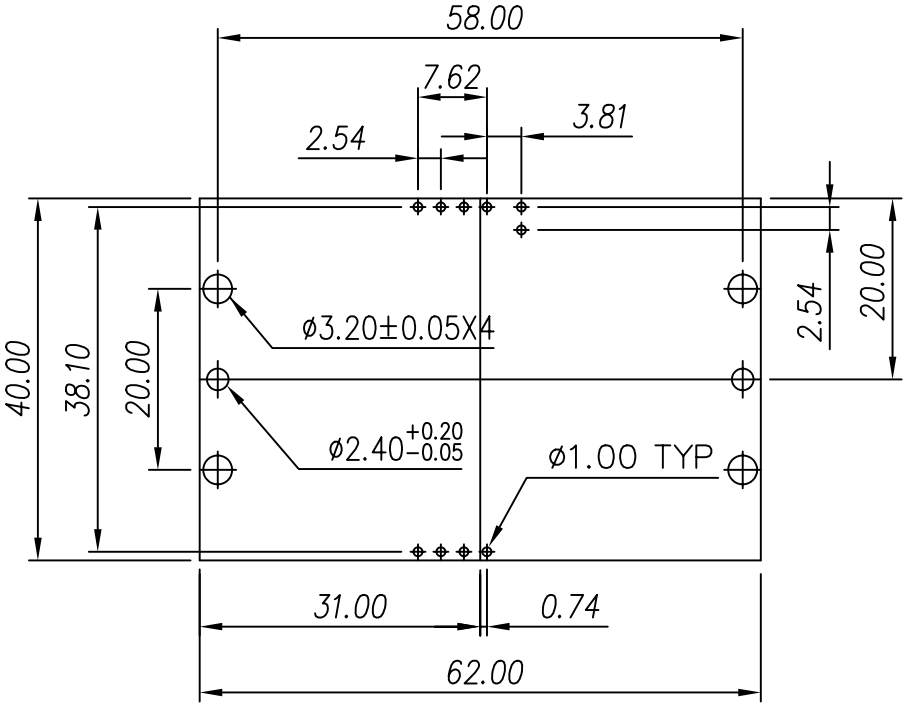

LAYOUT Tolerance±0.05

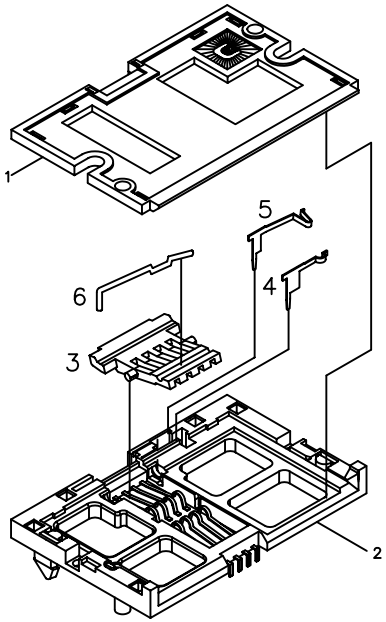

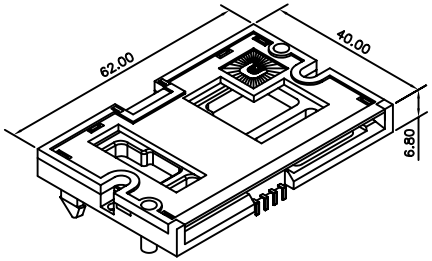

MORETHANALL CONNECTORS ASSEMBLIES
煜倫有限公司

PART NO. SCL-R68BC-08			TOLERANCES ARE	DESCRIP TION:	Smart Card Connector Landing DIP
DWG NO. SCL-R68BC-08	APPROVED BY CY		.X ± 0.35 .XX ± 0.20 .XXX AWG		
FILE NO.	DRAWING BY			AREA	REVISIONS / HK / DATE
UNIT / mm	SCALE 1 : 1	PROJECTION			