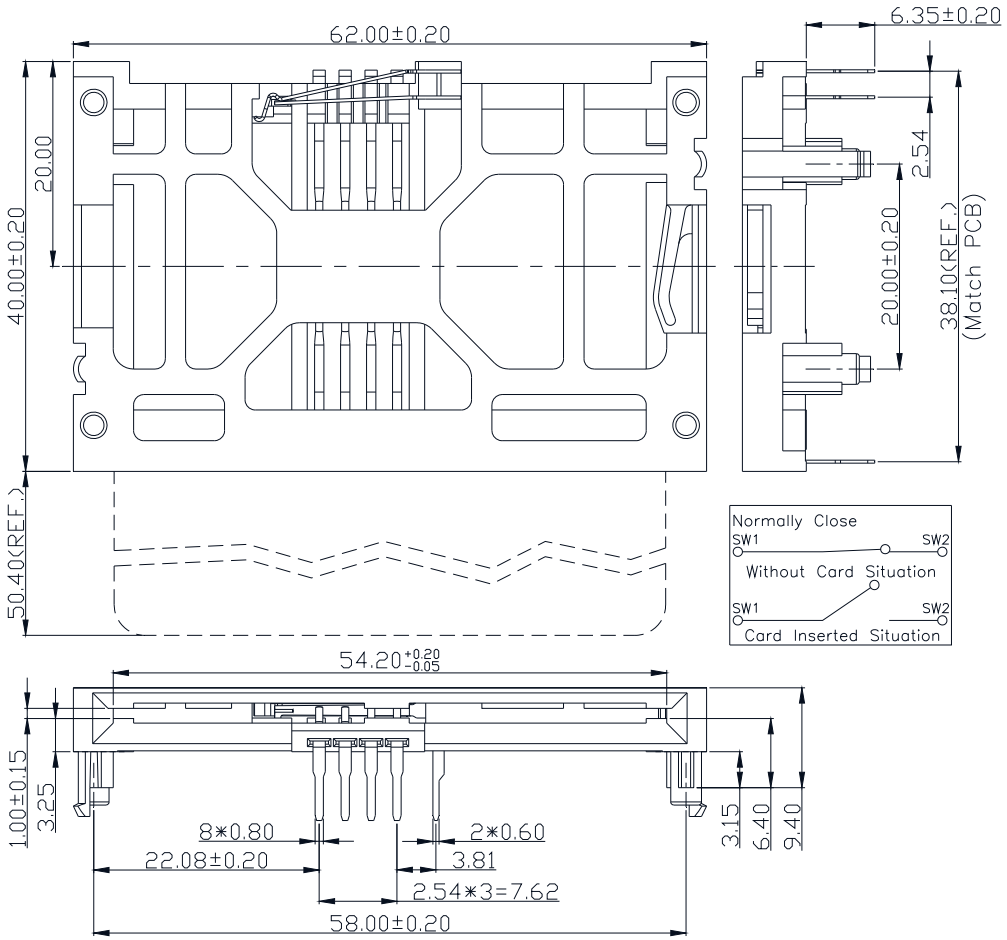

Unit: mm; Tolerances: ±.15 mm

Figure 5.1 Mechanical Outline dimension

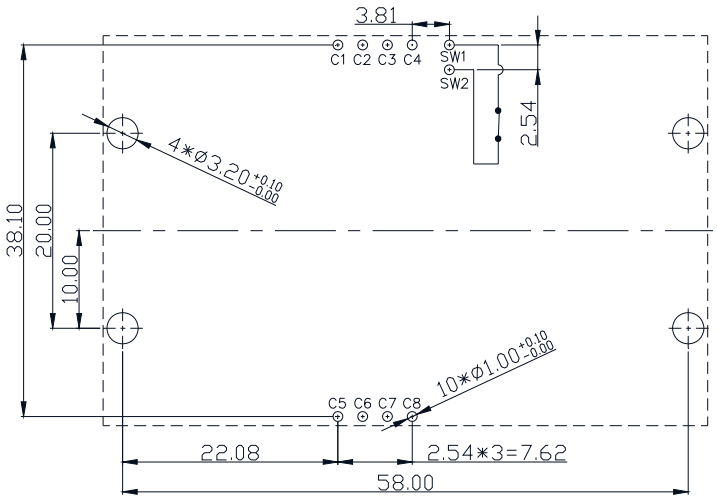

Unit: mm; Tolerances: ±.05 mm

Figure 5.2 Reference dimension for PCB layout

RoHS Compliant

MORETHANALL PCB CONNECTORS Cable ASSEMBLIES

煜倫股份有限公司

www.morethanall.com

DRAWING BY CY		TOLERANCES ARE
CHECKED BY GENIUS		X. ±
UNIT / mm	SCALE 1 : 1	.X ±
		.XX ±
DATE		.XXX ±
		ANG ±
SIZE A4	PPOJECTION	

照片框

ORDER INFORMATION

SCFA-R62A31-08-LF

- SERIES
- DIP 90°
- HIGH 6.25mm
- CLOSED/SWITCH
- 3.15mm/STANDOFF
- 08 WAY
- LEADFREE

DESCRIPTION:

APPENDIX A: PACKING INFORMATION

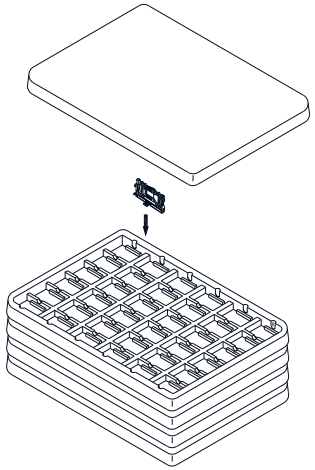

QT'Y: 36 PCs per tray
Meas.: 44.0L x 32.0W x 2.3H CM

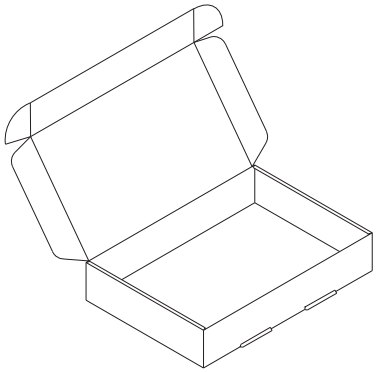

N.W.: 1.02 KGS
G.W.: 1.73 KGS
QT'Y: 144 PCs per box
(4 trays set in order
plus one cover)
Meas.: 46.0L x 32.0W x 8.8H CM

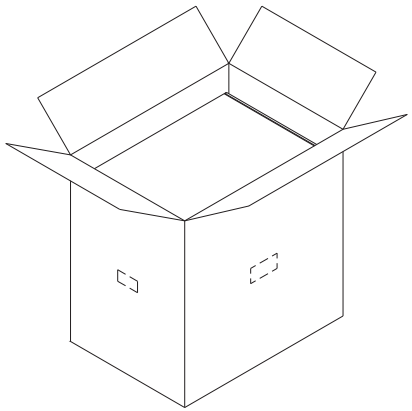

N.W.: 5.08 KGS
G.W.: 9.55 KGS
QT'Y: 720 PCs per carton
(5 boxes set in order)
Meas.: 49.5L x 36.0W x 49.0H CM

RoHS Compliant

MORETHANALL
PCB CONNECTORS
Cable ASSEMBLIES
煜倫股份有限公司
www.morethanall.com

DRAWING BY CY		TOLERANCES ARE
CHECKED BY GENIUS		X. ± .X ± .XX ± .XXX ± ANG ±
UNIT / mm	SCALE 1 : 1	
DATE		
SIZE A4	PPOJECTION	

照片框

ORDER INFORMATION

SCFA-R62A31-08-LF

SERIES
DIP 90°
CLOSED/SWITCH
HIGH 6.25mm
3.15mm/STANDOFF
08 WAY
LEADFREE

DESCRIPTION: