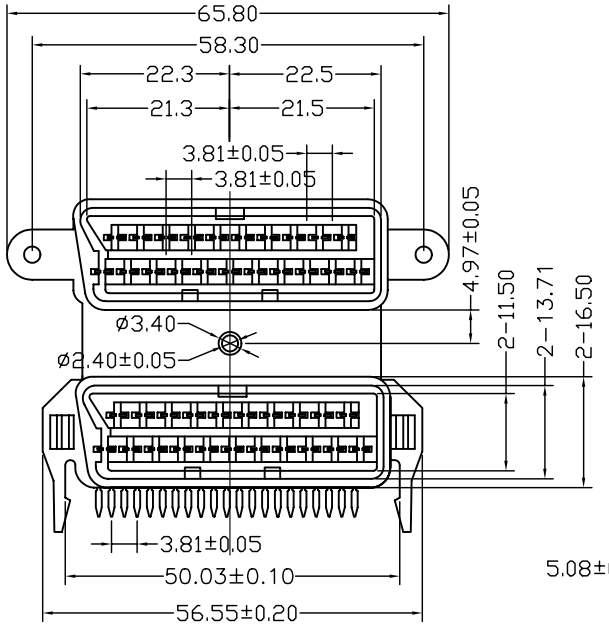

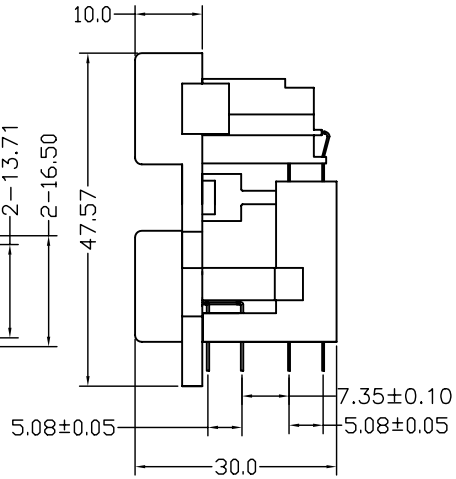

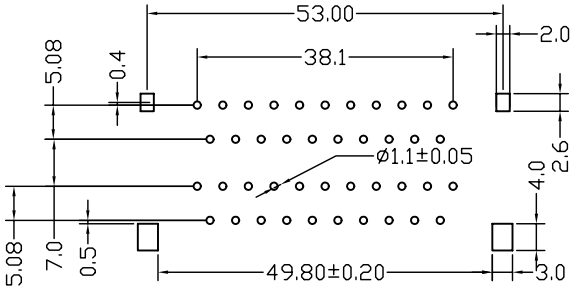

PCB LAYOUT

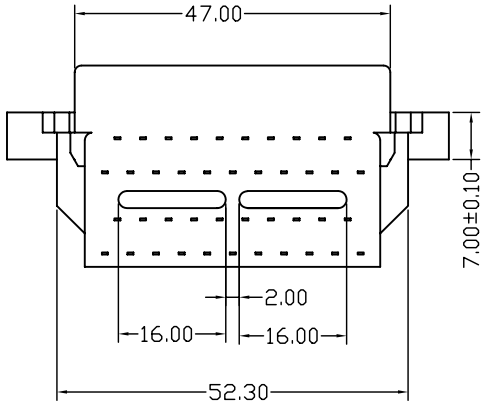

ORDER INFORMATION

NOTES:

1.MATERIAL

1.1 Insulator:PC Or ABS

1.2 Contact:Brass

1.3 Contact Plated:Tin Plated

2.SPECIFICATION

2.1 Current Rate:1 Amps

2.2 Insulator Resistance:5000M Ohms Min. at 500V DC

2.3 Dielectric Strength:1000V Per minute

2.4 Operation Temperature:−55℃ to+105℃

MORETHANALL CONNECTORS ASSEMBLIES

煜倫有限公司

PART NO. SCB1-SRLER-21			
DWG NO. SCB1-SRLER-21	CHECKED BY CY	TOLERANCES ARE .X ± 0.2 .XX ± .XXX ± AWG	DESCRIP TION: 90度雙層母座圓耳連體式PC
FILE NO.	DRAWING BY		
UNIT / mm SCALE 1 : 1	PROJECTION		AREA REVISIONS HK DATE