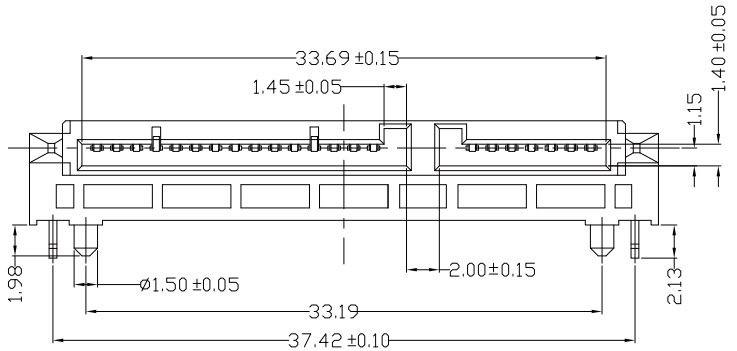

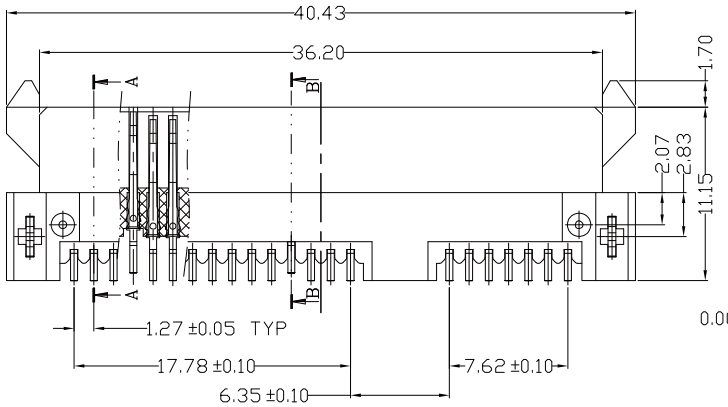

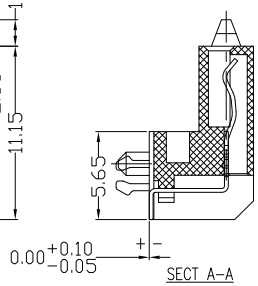

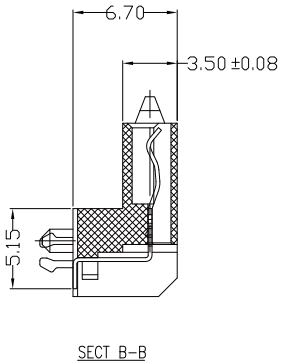

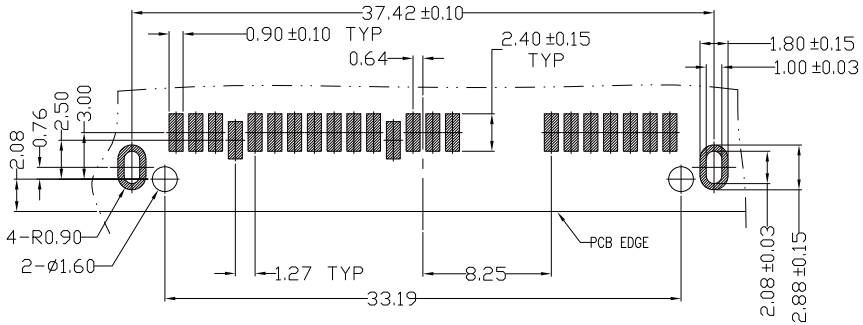

P.C.B LAYOUT (T=1.2)

NOTES:

*Material

Housing: LCP, UL 94V-0 rated;
Color: Black.
Contact: Phosphor Bronze
Plating: Gold Plating over Nikel on contact area;
Tin/Lead plating on terminal.

*Electrical Specification

Operation Voltage: 100 VAC max.
Current Rating: 1.5 Ampere per contact
Contact Resistance: 30 Milliohms max.
Insulation Resistance: 1000 Megohms min.
Dielectric Withstanding Voltage: 500 VAC

*Environmental

Operating Temperature: −55°C to +125°C

RoHS Compliant

MORETHANALL PCB CONNECTORS Cable ASSEMBLIES
煜倫股份有限公司
www.morethanall.com

DRAWING BY CY		TOLERANCES ARE
CHECKED BY GENIUS		X. ±
UNIT / mm	SCALE 1 : 1	.X ±
		.XX ±
		.XXX ±
DATE		ANG ±
SIZE A4	PPOJECTION	

照片框

ORDER INFORMATION

SATA-SWA067PZ-15+7-LF

SERIES
FEMALE
90°SMT
UPPER CONTACT
HIGH 6.7mm
POST
CLIP
15+7 WAY
LEADFREE

DESCRIPTION: SATA 15+7 90°SMT型(母座)