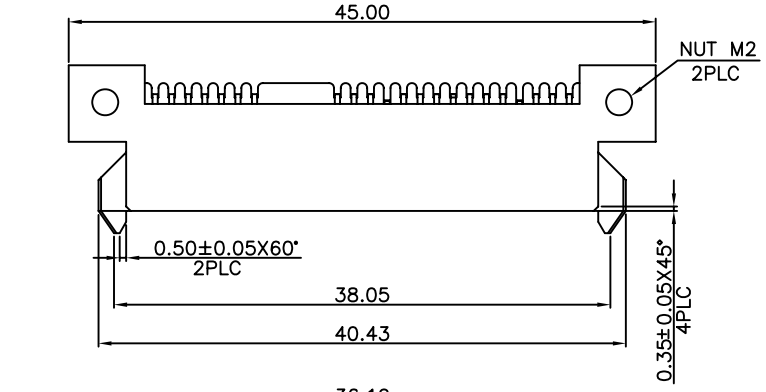

NOTES:
1.MATERIAL:
HOUSING:THERMOPLASTIC, HIGH TEMP, 30% G/F UL94 V-0
COLOR:BLACK
CONTACT:PHOSPHOR BRONZE
NUT:BRASS
2.FINISH:
CONTACT:30u" GOLD/TIN PLATING ON CONTACT AREA
100u" MIN.TIN PLATING ON SOLDERTAILS
50u" MIN.NICKEL UNDERPLATING OVER ALL
NUT:50u" MIN.NICKEL UNDERPLATING OVER ALL

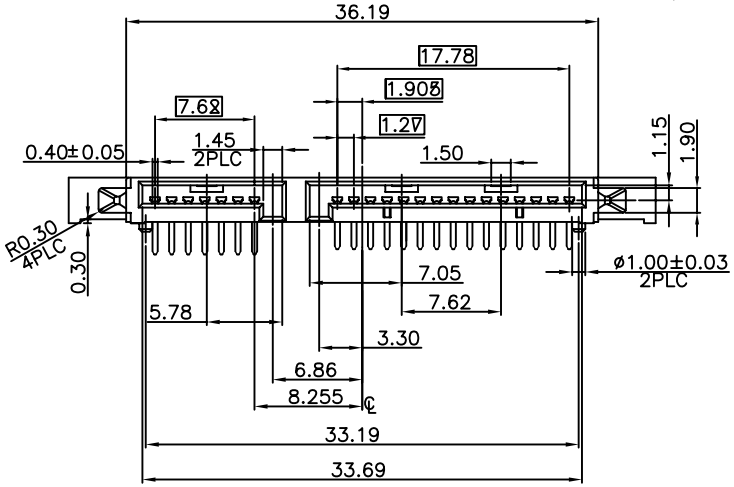

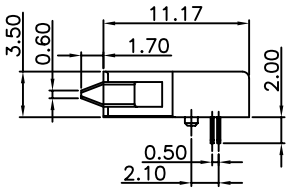

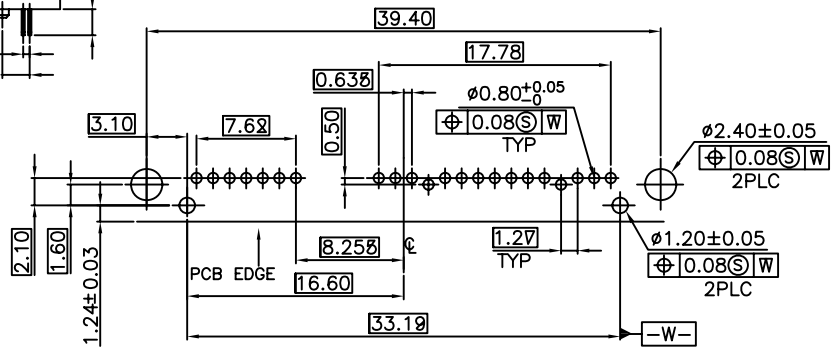

RECOMMEND PCB LAYOUT (T=1.6)
PCB TOLERANCE:±0.05

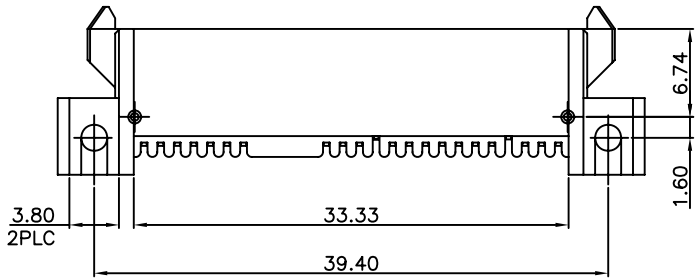

RoHS Compliant

MORETHANALL
PCB CONNECTORS
Cable ASSEMBLIES
煜倫股份有限公司
www.morethanall.com

DRAWING BY CY		TOLERANCES ARE
CHECKED BY GENIUS		X. ±
UNIT / mm	SCALE 1 : 1	.X ±
		.XX ±
DATE		.XXX ±
		ANG ±
SIZE A4	PPOJECTION	

照片框

ORDER INFORMATION

SATA-SRB035EP16-7+15-LF

- SERIES
- FEMALE
- DIP 90°
- BOTTOM CONTACT
- HIGH 3.5mm
- EAR+POST 1.6mm
- 22 WAY
- LEADFREE

DESCRIPTION: SATA 7+15P板上母座DIP型WITH NUT塑高3.5mm