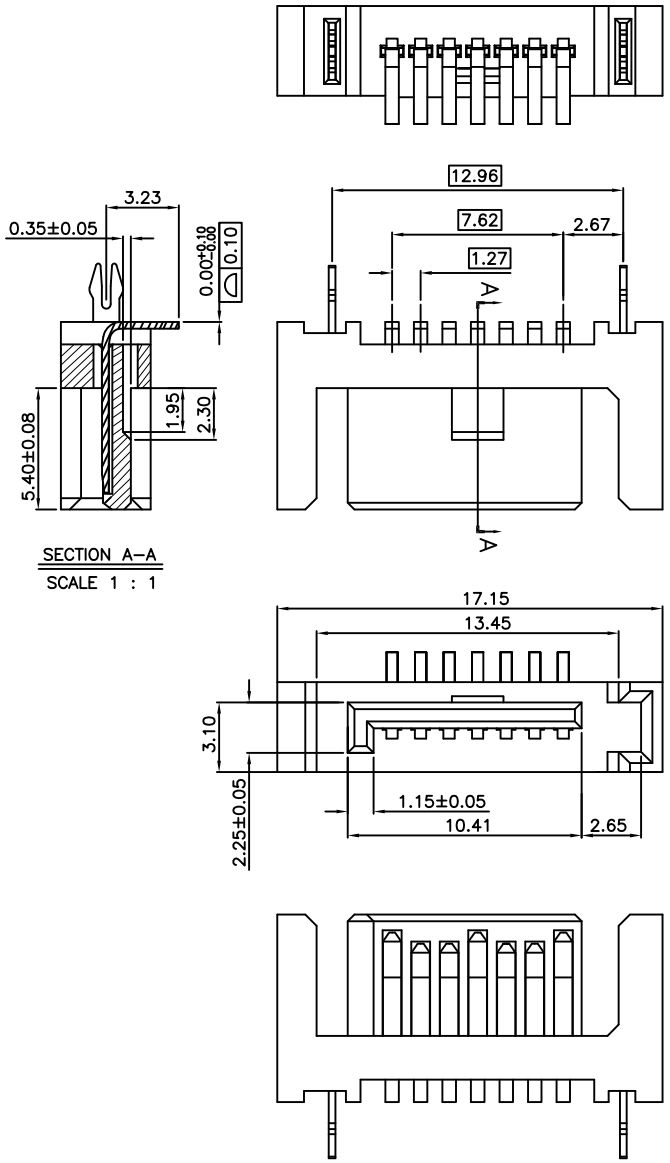

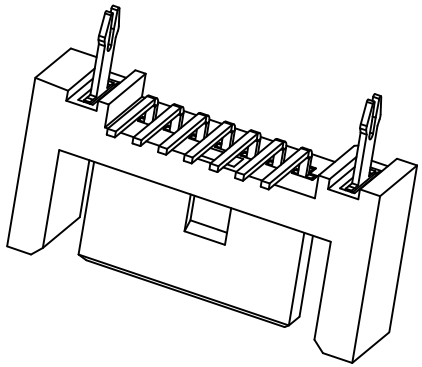

NOTES:
1,MATERIAL:
HOUSING: HIGH TEMPERATURE THERMOPLASTIC,UL94 V–0,
CONTACT:COPPER ALLOY T=0.30mm
LATCH:COPPER ALLOY T=0.30mm
2,PLATING:
LATCH:CU OVER 50u" MIN NICKEL UNDERPLATE,SOLDERTAIL150u"MIN MISTY TIN OVER 50u" MIN NICKEL UNDERPLATE
CONTACT:100U"MIN MISTY TIN PLATING ON SOLDERTAILS 50U"MIN NICKET UNDERPLATING OVER ALL GOLD SPECIFICATION: 15u";
3.ELECTRONICAL SPECIFICATION:
CURRENT RATING:1.5 AMPERE PER CONTACT
CONTACT RESISTANCE:30 MILLIOHMS MAX.
INSULATION RESISTANCE:1000 MEGOHMS MIN.
DIELECTRIC WITHSTANDING VOLTAGE:500 VAC.
OPERATING TEMPERATURE:–20°C~+85°C

RoHS Compliant

MORETHANALL PCB CONNECTORS Cable ASSEMBLIES
煜倫股份有限公司
www.morethanall.com

DRAWING BY CY		TOLERANCES ARE
CHECKED BY GENIUS		X. ±
UNIT / mm	SCALE 1 : 1	.X ±
		.XX ±
		.XXX ±
DATE		ANG ±
SIZE A4	PPOJECTION	

照片框

ORDER INFORMATION

SATA-PVZBS15-07L-LF

SERIES
MALE
180°SMT
CLIP
BOTTOM CONTACT
SEMI GOLD 15u"
07 WAY
L TYPE FOOT
LEADFREE

DESCRIPTION: SATA 7P PLUG 雙導槽 SMT BEND