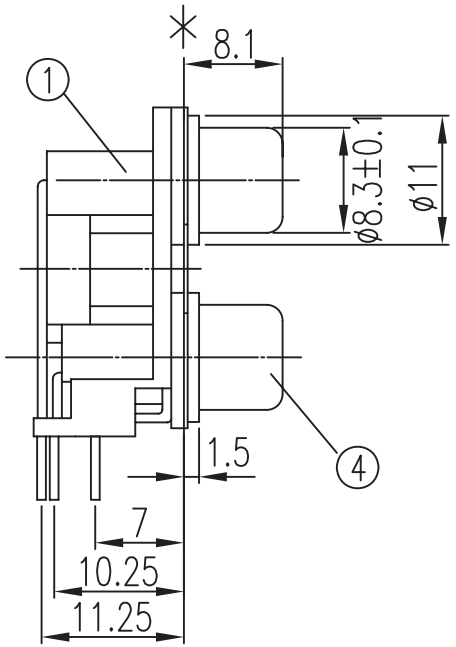

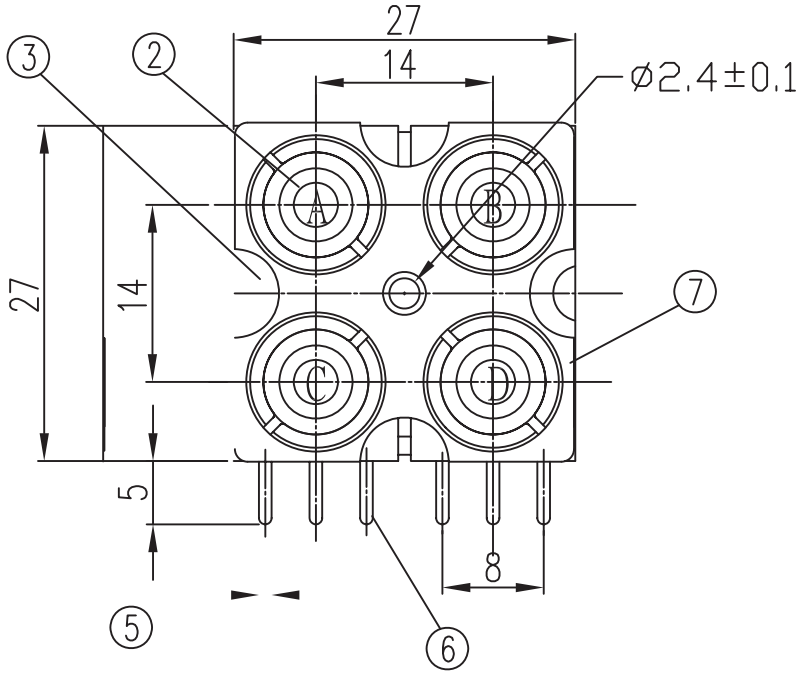

	A	B
	C	D
TYPE COLOR	YELLOW	WHITE
	BLACK	RED

SCHEMATIC

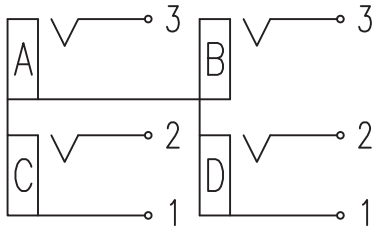

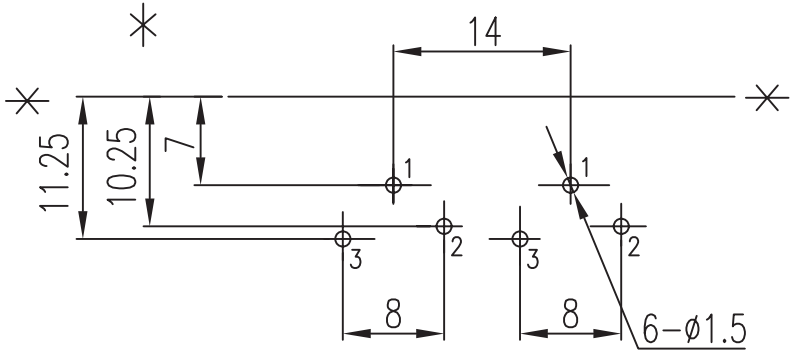

T:1.6 Dimensions of PC board holes

Tolerance : ±0.05(Printed-bottom view)

UNLESS OTHERWISE SPECIFIED, TOLERANCE ON DECIMAL: ±0.3

LTR	PART NAME	QTY	MATERIAL	REMARK
7	SEALED PLATE	1	C2680 t=0.3	Cu/Sn PLATED
6	TERMINAL	2	C2680 t=0.3	Cu/Sn PLATED
5	TERMINAL	2	C2680 t=0.3	Cu/Sn PLATED
4	OUTER CONTACT	2	C2680 t=0.3	Cu/Sn PLATED
3	COVER	2	ABS	UL-94HB
2	WASHER	4	ABS	UL-94HB
1	HOUSING	1	ABS	UL-94HB

RoHS Compliant

MORETHANALL PCB CONNECTORS Cable ASSEMBLIES

煜倫股份有限公司

www.morethanall.com

DRAWING BY CY	
CHECKED BY GENIUS	
UNIT / mm	SCALE 1 : 1
DATE	
SIZE A4	PPOJECTION

TOLERANCES ARE
X. ±
.X ±
.XX ±
.XXX ±
ANG ±

照片框

ORDER INFORMATION

RCAB2-JR70E1YWKR-03-LF

SERIES
JACK
DIP 90°
7.0mm
EAR
CD:BLACK / RED
AB:YELLOW / WHITE
03 WAY
LEADFREE

DESCRIPTION: PIN JACK