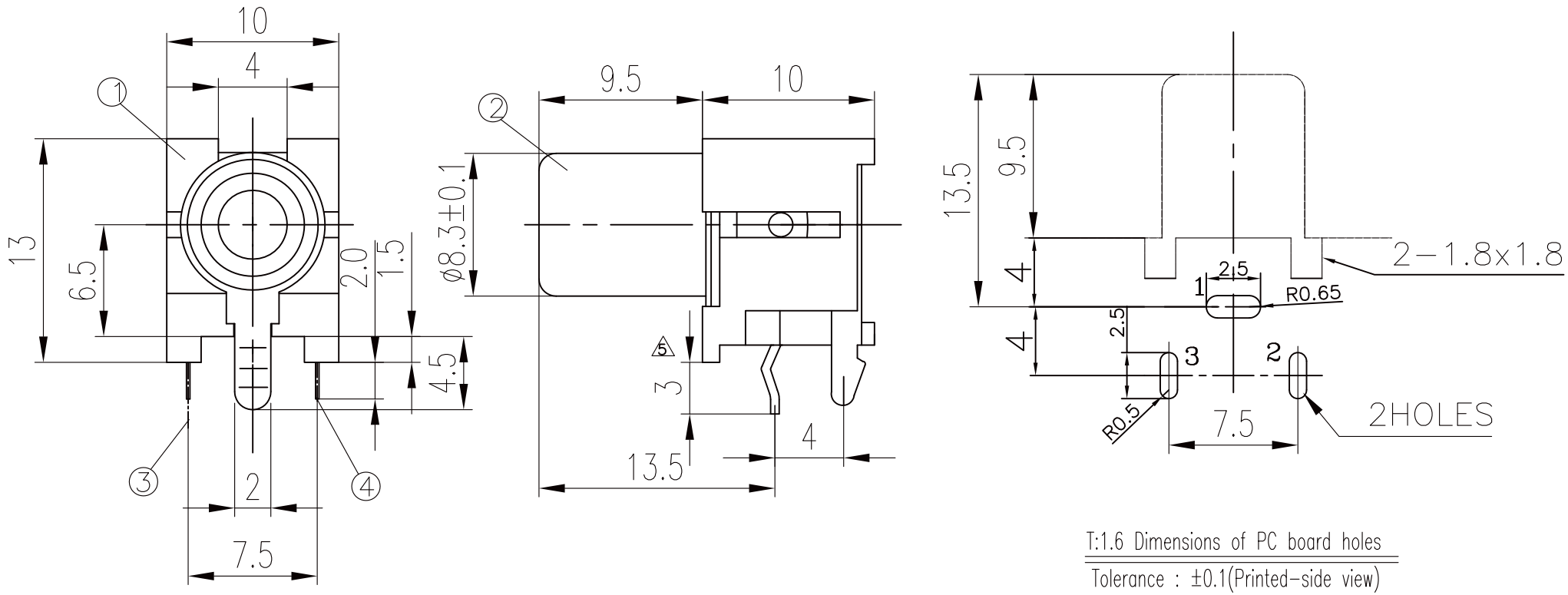

Model No.	RCA-JR44P2xx-03
Schematic	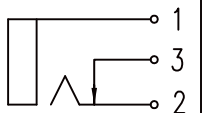

MODEL NO.	COLOR OF HOUSING
RCA-JR40P2BK-03	BLACK
RCA-JR40P2YL-03	YELLOW(123C)
RCA-JR40P2RD-03	RED(1955C)
RCA-JR40P2WH-03	WHITE
RCA-JR40P2OR-03	ORANGE(164C)
RCA-JR40P2GR-03	GREEN(347C)

LTR	PART NAME	QTY	MATERIAL	REMARK
4	SHUNT SPRING	1	C2680 t=0.4	MB:Cu Sn PLATED
3	TIP SPRING	1	C5191 t=0.3	MB:Cu Sn PLATED
2	OUTER CONTACT	1	C2680 t=0.4	MB:Cu Cu/Sn PLATED
1	HOUSING	1	PBT 4815	UL-94V0

UNLESS OTHERWISE SPECIFIED, TOLERANCE ON DECIMAL: ±0.3

RoHS Compliant

MORETHANALL PCB CONNECTORS Cable ASSEMBLIES
煜倫股份有限公司
www.morethanall.com

DRAWING BY CY		TOLERANCES ARE
CHECKED BY GENIUS		X. ±
UNIT / mm	SCALE 1 : 1	.X ±
		.XX ±
DATE		.XXX ±
		ANG ±
SIZE A4	PPOJECTION	

照片框

ORDER INFORMATION

RCA-JR44P2xx-03-LF

- SERIES: JACK, DIP 90°, 4.0+4.0mm, POST x 2
- 03 WAY
- BK:BLACK, YL:YELLOW, RD:RED, WH:WHITE, OR:ORANGE, GE:GREEN
- LEADFREE

DESCRIPTION: PIN JACK