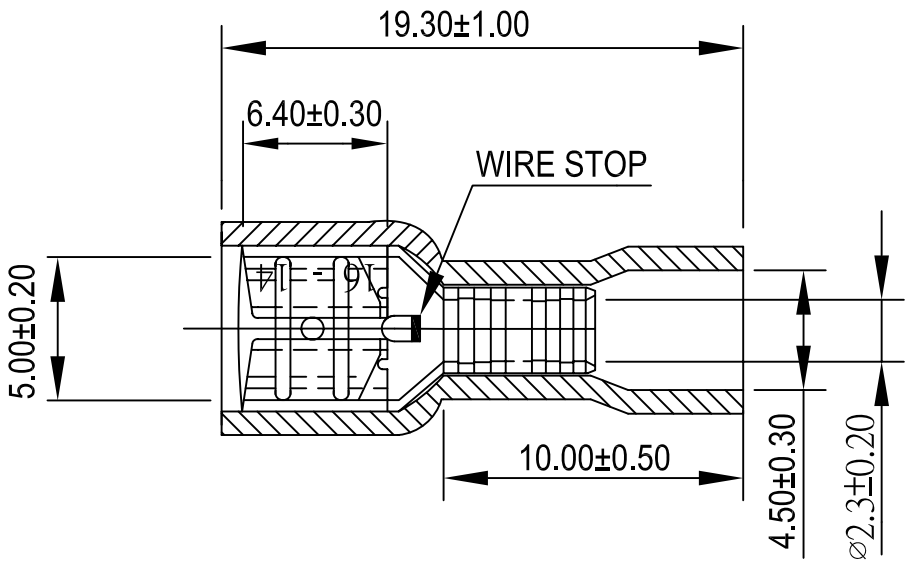

NOTE:

1. MAXIMUM ELECTRIC CURRENT:

A.W.G.	16	14
AMP.	10	15

2.MAXIMUM ELECTRICAL RATING: 75°C 300 VOLTS MAX.
3.INSULATION MATERIAL,VINYL
4.INSULATION COLOR,BLUE
5.TERMINAL MATERIAL,BRASS
6.WIRE RANGE: 16-14A.W.G. (1.5-2.5mm^2)
7.TERMINAL SURFACE TREATMENT : TIN PLATED
8. NEMA TAB: .032*.187 (0.8*4.75)
9.TERMINAL THICKNESS, 0.35mm

RoHS Compliant

MORETHANALL PCB CONNECTORS Cable ASSEMBLIES
煜倫股份有限公司
www.morethanall.com

DRAWING BY CY	
CHECKED BY GENIUS	
UNIT / mm	SCALE 1 : 1
DATE	
SIZE A4	PPOJECTION

TOLERANCES ARE
X. ±
.X ±
.XX ±
.XXX ±
ANG ±

照片框

ORDER INFORMATION

Q187-FT8VF-14-LF

SERIES
FEMALE
TERMINAL
THICKNESS 0.8mm
PVC
FULL
14~16 AWG
LEADFREE

DESCRIPTION: