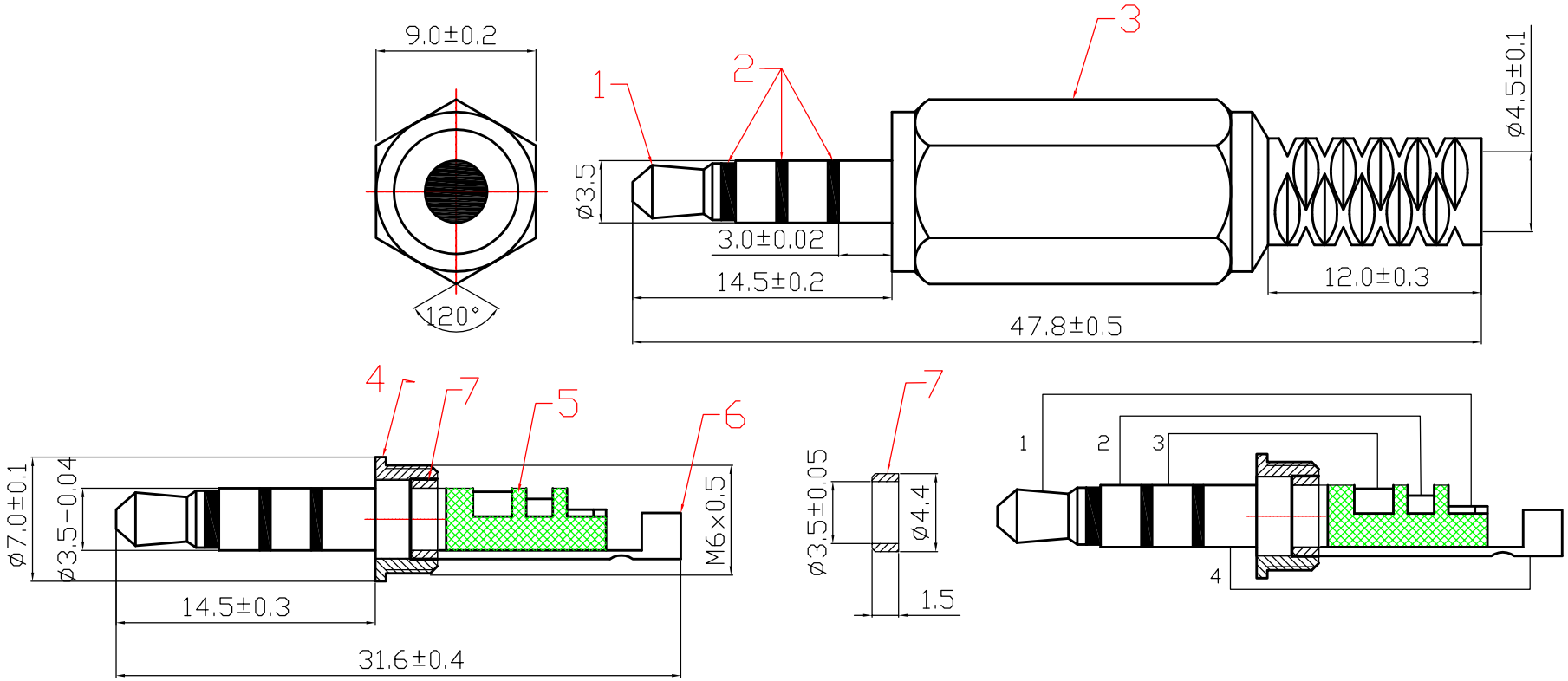

ITEM	DESIGNATION	MATERIAL	
7	FERRULE	BRASS	Gold
6	CRIMPING PATCH	BRASS	Gold
5	DIELECTRIC	ABS	
4	BODY	BRASS	Gold
3	PLASTIC HANDLE	PVC	
2	DIELECTRIC	POM	
1	FRONT POINT	BRASS	Gold

RoHS Compliant

MORETHANALL
PCB CONNECTORS
Cable ASSEMBLIES
煜倫股份有限公司
www.morethanall.com

DRAWING BY CY
CHECKED BY GENIUS
UNIT / mm | SCALE 1 : 1
DATE
SIZE A4 | PPOJECTION

TOLERANCES ARE
X. ±
.X ±
.XX ±
.XXX ±
ANG ±

照片框

ORDER INFORMATION

PP-AG-04-LF
SERIES
GOLD ASSEMBLY
04 WAY
LEADFREE

DESCRIPTION: 3.5mm(4 Pole) Plug