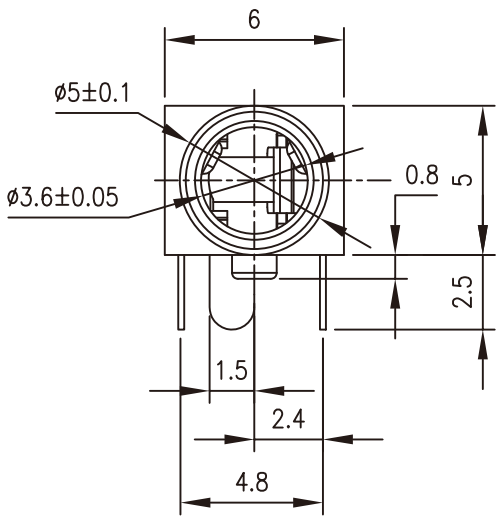

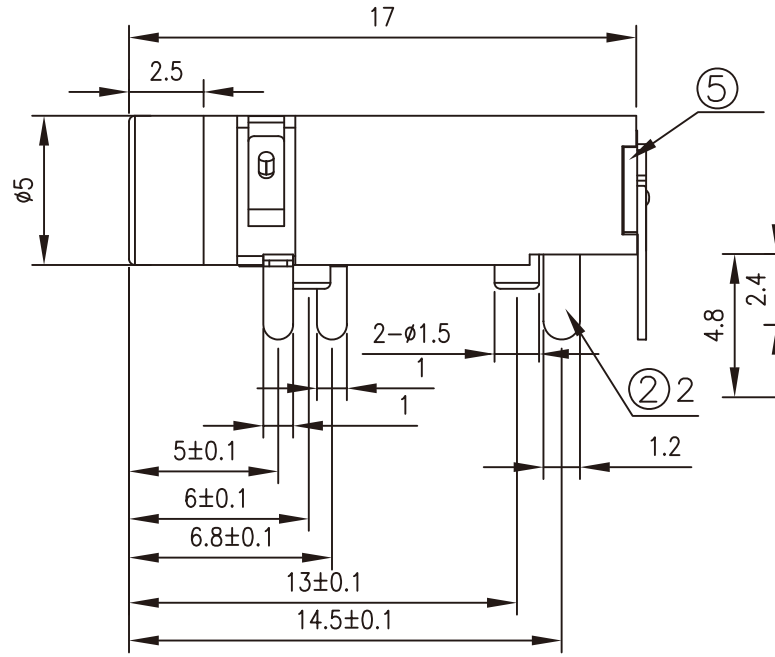

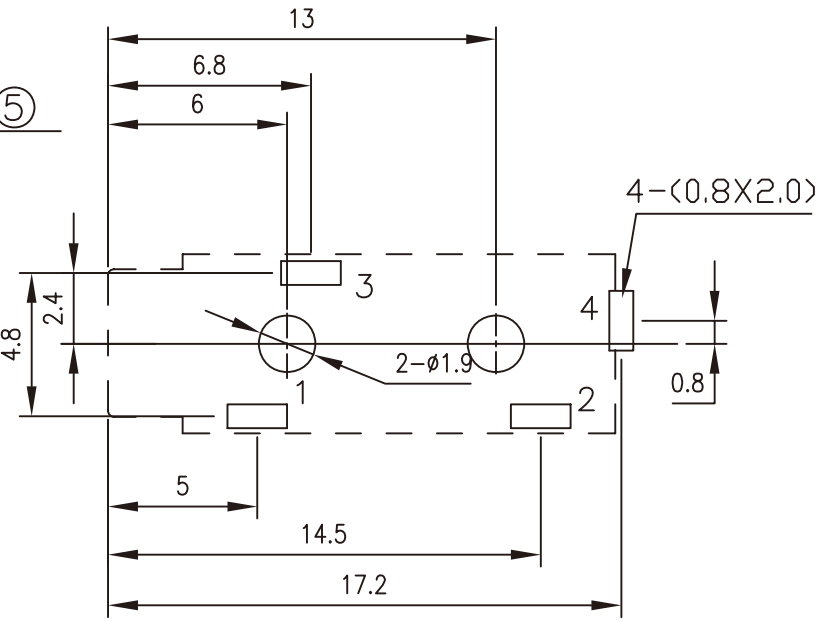

T:1.6 Dimensions of PC board holes

Tolerance : ±0.05(Printed-top view)

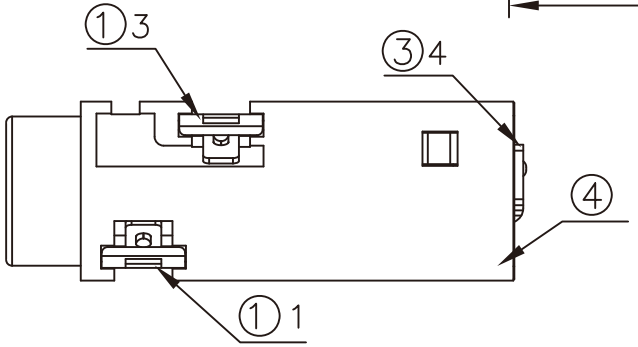

SCHEMATIC

PJ-R37-04CR

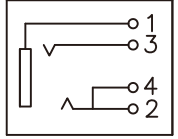

LTR	PART NAME	QTY	MATERIAL		REMARK
⑤	COVER	1	PA9T		UL-94V0(BLACK)
④	HOUSING	1	PA9T		UL-94V0(BLACK)
③	TERMINAL 4#	1	C2680	t=0.3	Ag PLATED
②	TERMINAL 2#	1	C5191	t=0.3	Ag PLATED
①	TERMINAL 1#	2	C5191	t=0.2	Ag PLATED

UNLESS OTHERWISE SPECIFIED, TOLERANCE ON DECIMAL: ±0.3

RoHS Compliant

MORETHANALL PCB CONNECTORS Cable ASSEMBLIES

煜倫股份有限公司

www.morethanall.com

DRAWING BY CY		TOLERANCES ARE
CHECKED BY GENIUS		X. ±
UNIT / mm	SCALE 1 : 1	.X ±
		.XX ±
DATE		.XXX ±
		ANG ±
SIZE A4	PPOJECTION	

照片框

ORDER INFORMATION

PJ-R37-04CR-LF

SERIES

DIP 90°

3.5+7.0mm

4P3C

LEADFREE

DESCRIPTION: MINIATURE JACK