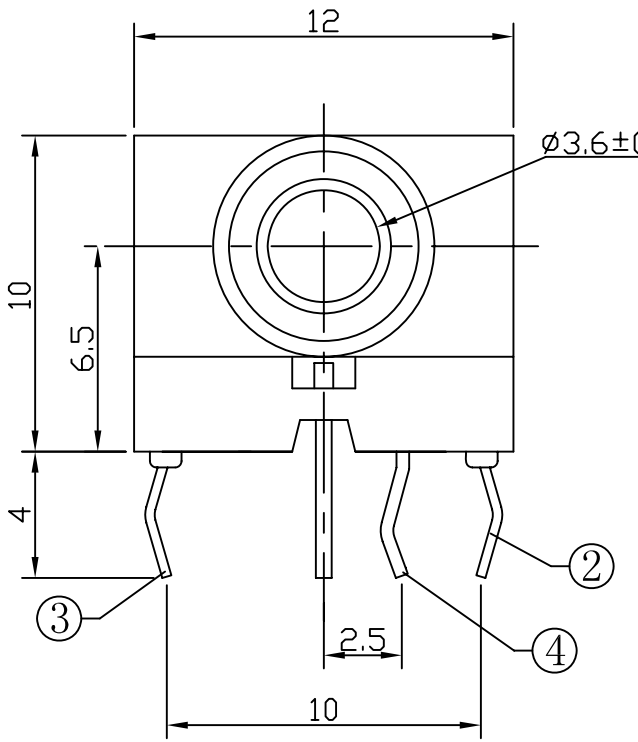

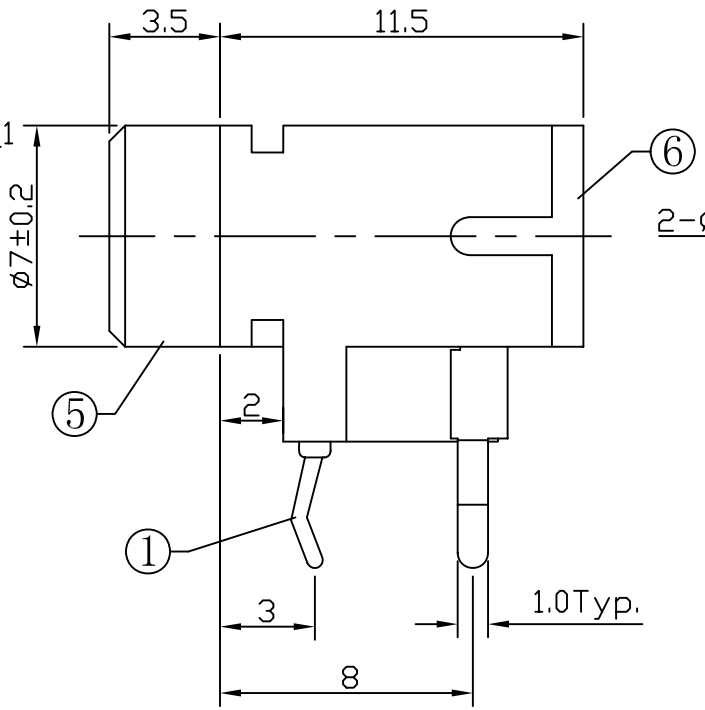

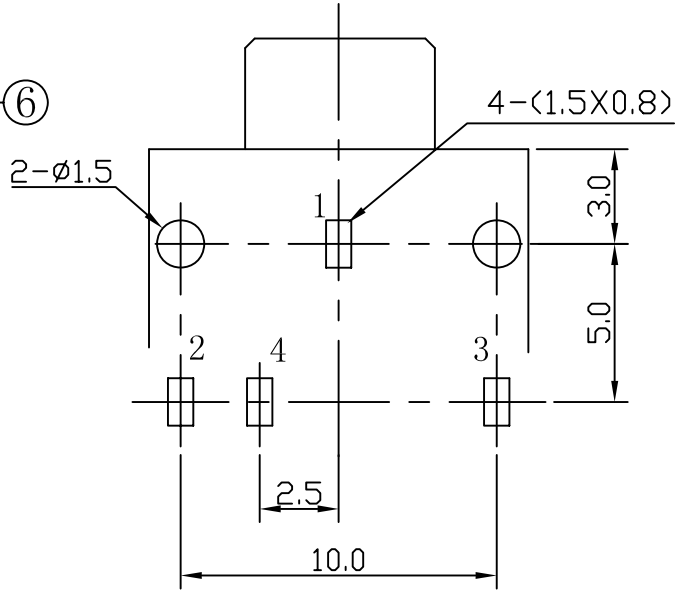

T:1.6 Dimensions of PC board holes

Tolerance : ±0.05(Printed-top view)

SCHEMATIC

PJ-R34-04CR

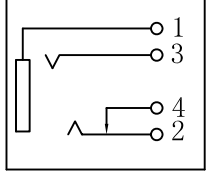

LTR	PART NAME	QTY	MATERIAL	REMARK
6	COVER	1	PBT 4815	UL-94V0
5	HOUSING	1	PBT 4815	UL-94V0
4	4# CONTACT FOOT	1	C2680	Sn PLATED
3	3# CONTACT FOOT	1	C5191	Sn PLATED
2	2# CONTACT FOOT	1	C5191	Sn PLATED
1	1# CONTACT FOOT	1	C2680	Sn PLATED

UNLESS OTHERWISE SPECIFIED, TOLERANCE ON DECIMAL: ±0.3

RoHS Compliant

MORETHANALL PCB CONNECTORS Cable ASSEMBLIES

煜倫股份有限公司

www.morethanall.com

DRAWING BY CY		TOLERANCES ARE
CHECKED BY GENIUS		X. ±
UNIT / mm	SCALE 1 : 1	.X ±
		.XX ±
DATE		.XXX ±
		ANG ±
SIZE A4	PPOJECTION	

照片框

ORDER INFORMATION

PJ-R34-04CR-LF

SERIES

3.0+5.0mm DIP 90°

4C RIGHT

LEADFREE

DESCRIPTION: