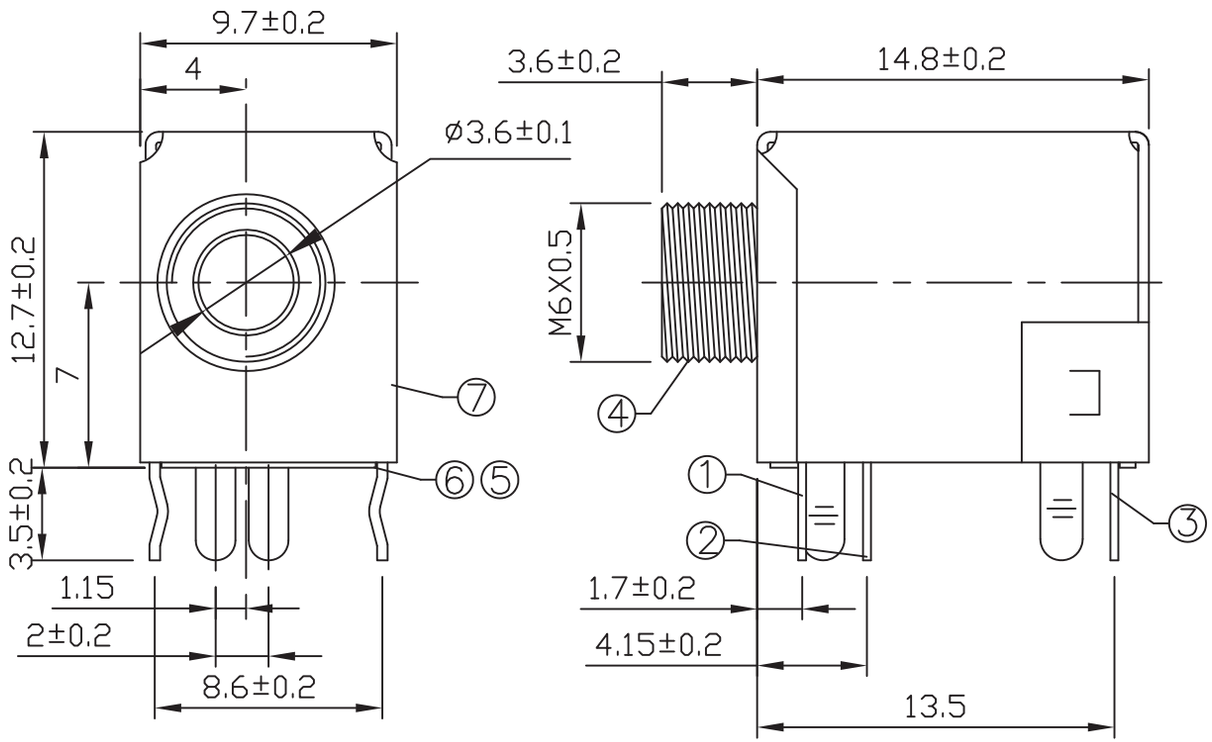

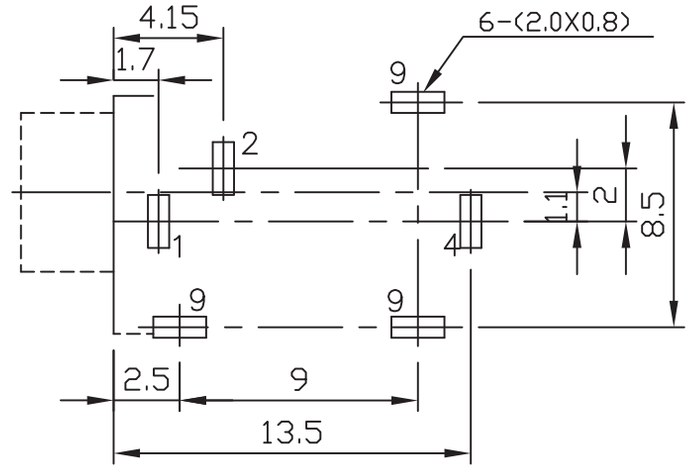

T:1.6 Dimensions of PC board holes

Tolerance : ±0.1(Printed-top view)

SCHEMATIC

PJ-R129T-03B

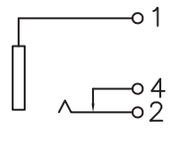

PJ-R129T-03B-LF

LEADFREE

RoHS Compliant

UNLESS OTHERWISE SPECIFIED, TOLERANCE ON DECIMAL: ±0.3

LTR	PART NAME	QTY	MATERIAL	REMARK
7	COAT	1	SPCC	MB:Cu Ni PLATED
6	HOUSING	1	PBT 4815	UL-94V0
5	COVER	1	PBT 4815	UL-94V0
4	AXIS SUPPORT	1	H59(COPPER ALLOY)	MB:Cu Ni PLATED
3	CURVE PIECE	1	C2680	MB:Cu Sn PLATED
2	SPRING PIECE	1	C5191	MB:Cu Sn PLATED
1	FLAT PIECE	1	C2680	MB:Cu Sn PLATED

MORETHANALL CONNECTORS ASSEMBLIES

煜倫股份有限公司

PART NO. PJ-R129T-03B			
DWG NO. PJ-R129T-03B	CHECKED BY CY	TOLERANCES ARE .X ± 0.2 .XX ± .XXX ± AWG	DESCRIP TION:
FILE NO.	DRAWING BY		
UNIT / mm SCALE 1:1	PROJECTION		AREA / REVISIONS / HK / DATE