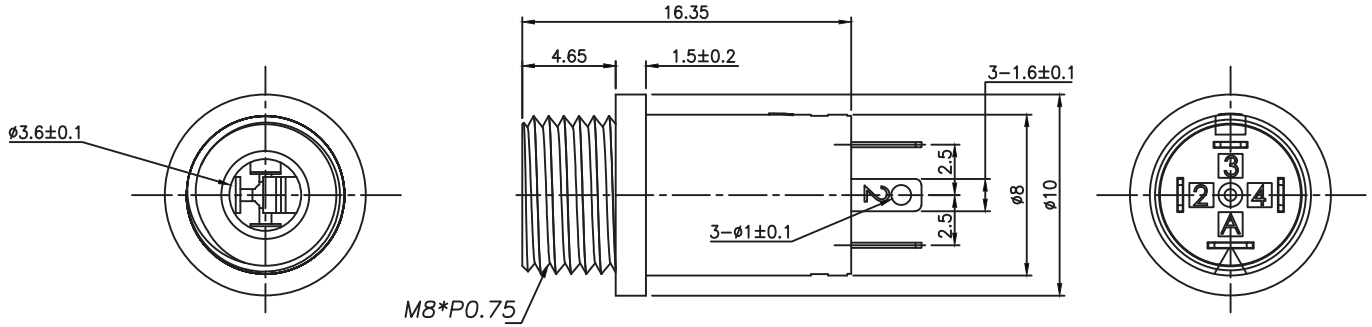

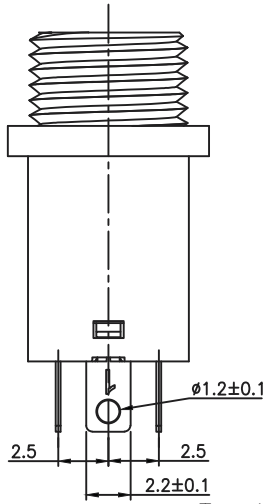

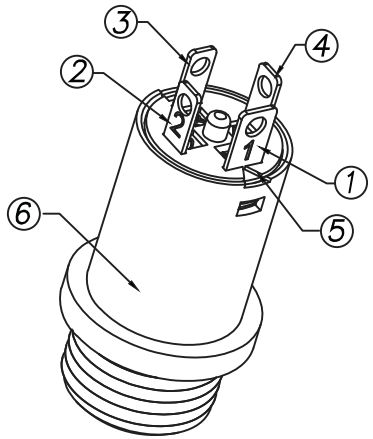

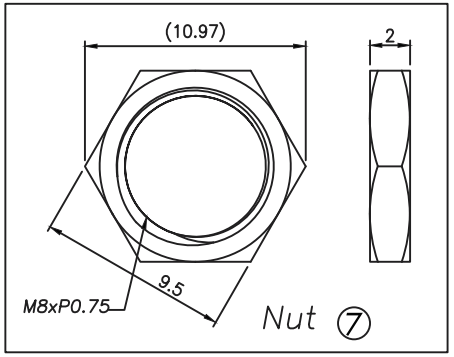

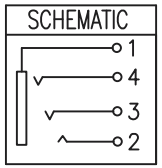

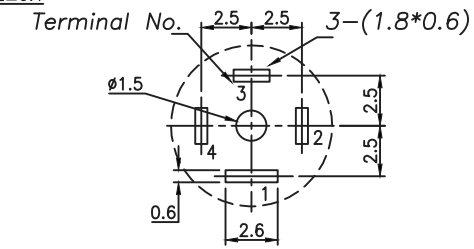

T:1.6 Dimensions of PC board holes

Tolerance : ±0.05(Printed-Top view)

UNLESS OTHERWISE SPECIFIED, TOLERANCE ON DECIMAL: ±0.3

LTR	PART NAME	QTY	MATERIAL	REMARK
7	NUT	1	COPPER ALLOY	Ni PLATED
6	HOUSING	1	PA66	UL-94V0
5	COVER	1	PA66	BLACK
4	RING SPRING	1	C5191 t=0.25	Ag PLATED
3	RING SPRING	1	C5191 t=0.25	Ag PLATED
2	TIP SPRING	1	C5191 t=0.25	Ag PLATED
1	EARTH SPRING	1	C5191 t=0.25	Ag PLATED

RoHS Compliant

MORETHANALL PCB CONNECTORS Cable ASSEMBLIES

煜倫股份有限公司

www.morethanall.com

DRAWING BY CY	
CHECKED BY GENIUS	
UNIT / mm	SCALE 1 : 1
DATE	
SIZE A4	PPOJECTION

TOLERANCES ARE
X. ±
.X ±
.XX ±
.XXX ±
ANG ±

照片框

ORDER INFORMATION

PJ-DPBN-04-LF

SERIES
DIP 180°
PANEL BACK
NUT
04 WAY
LEADFREE

DESCRIPTION: MINIATURE JACK