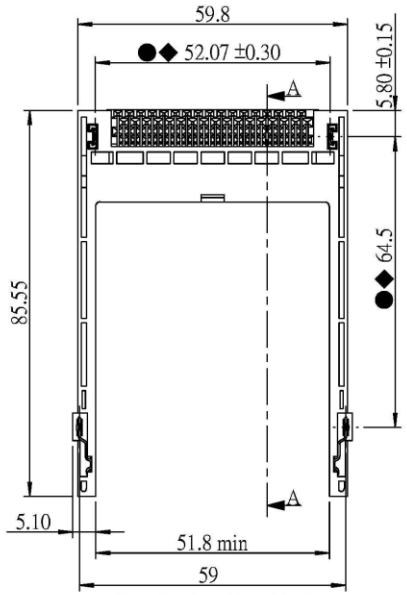

Board lock to Board lock

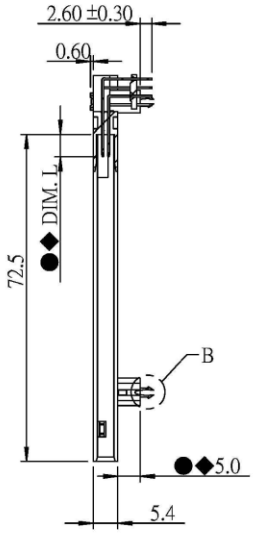

A-A

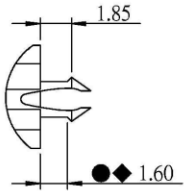

B (3 : 1)

NOTE:
1. INSPECTION SYMBOL:
   ● : MANUFACTURER INSPECTION
   ◆ : Q.C INSPECTION
2. PLEASE REFER TO TABLE 1 FOR TERMINAL LENGTH. TABLE 1
3. VOLTAGE 5V

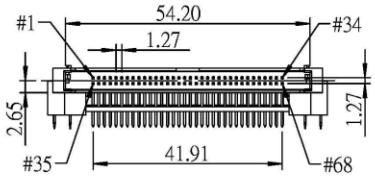

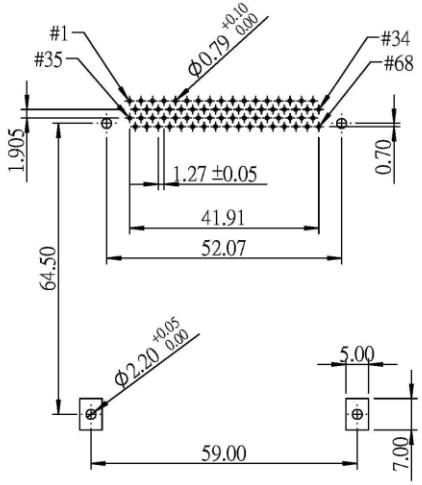

PCB LAYOUT : COMPONENT SIDE
PCB THK. 1.60+0.10

PIN TYPE	DIM. L ±0.20	PIN NUMBER
DETECT	3.50 mm	36 , 67
GENERAL	4.25 mm	THE REST
POWER	5.00 mm	1, 17, 34, 35, 51, 68

RoHS Compliant

MORETHANALL PCB CONNECTORS Cable ASSEMBLIES
煜倫股份有限公司
www.morethanall.com

DRAWING BY CY		TOLERANCES ARE
CHECKED BY GENIUS		X. ±
UNIT / mm	SCALE 1 : 1	.X ±
		.XX ±
DATE		.XXX ±
		ANG ±
SIZE A4	PPOJECTION	

ORDER INFORMATION

PCC-PRL50V5-68-LF

SERIES
MALE
DIP 90°
LONG RAIL
STANDOFF 5.0mm
5.0V
68WAY
LEADFREE

DESCRIPTION:

	MATERIAL	P/N	REMARKS
1	TRAY	TRAY 007-040B	28 TRAYS X 12 PCS
2	COVER	TRAY 007-006A	2X(1COVER+14TRAYS)
3	CARTON	CTN-C100B	CARTON/28 TRAYS/336PCS
4	POLY BAG	P-0001	1 POLY BAG/CARTON
5	LABEL(for RoHS)	CTP-00002	1 LABEL/CARTON
6	LABEL(for RoHS)	CTB-00002	1 LABEL/TRAY
7	TAPE		

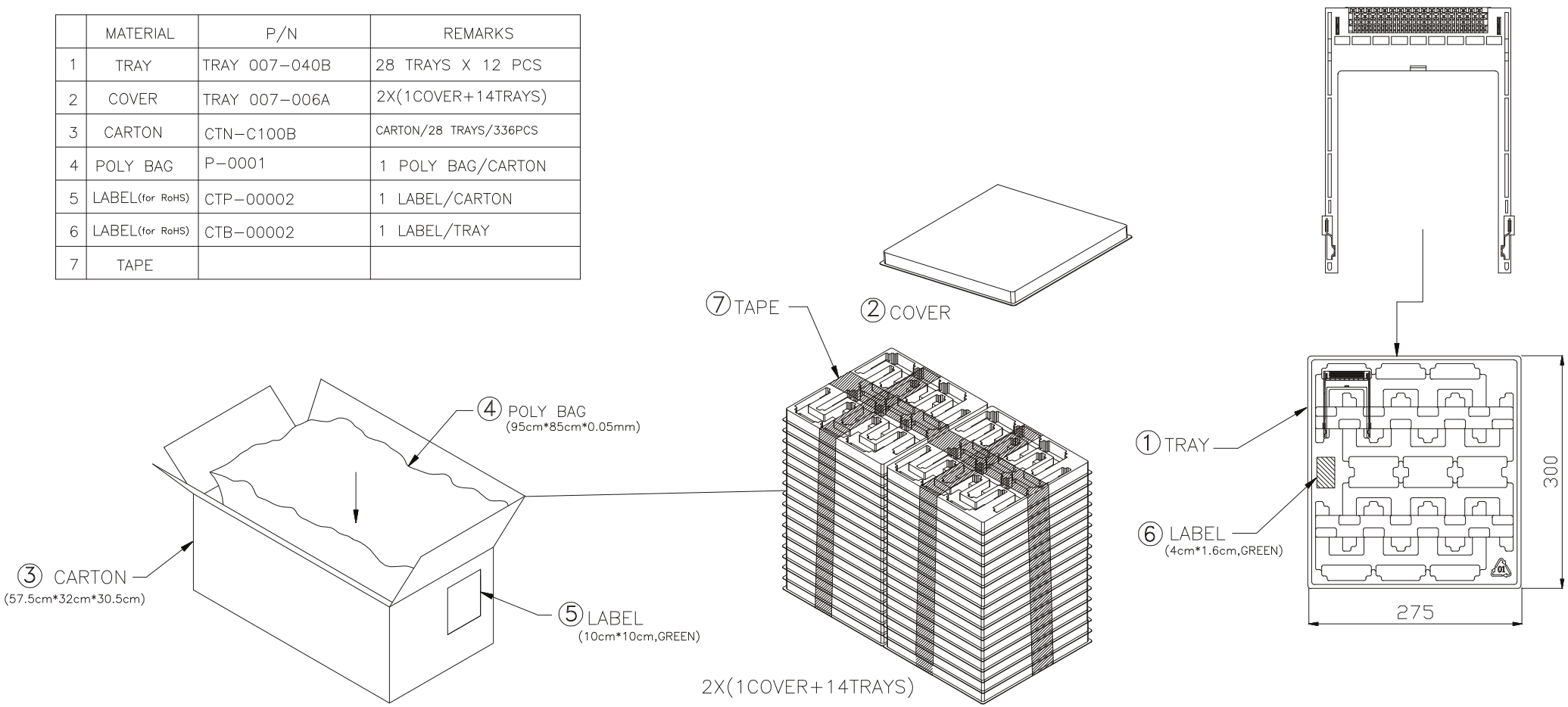

RoHS Compliant

MORETHANALL
PCB CONNECTORS
Cable ASSEMBLIES
煜倫股份有限公司
www.morethanall.com

DRAWING BY CY		TOLERANCES ARE
CHECKED BY GENIUS		X. ±
UNIT / mm	SCALE 1 : 1	.X ±
		.XX ±
		.XXX ±
DATE		ANG ±
SIZE A4	PPOJECTION	

ORDER INFORMATION

PCC-PRL50V5-68-LF

- SERIES
- MALE
- DIP 90°
- LONG RAIL
- STANDOFF 5.0mm
- 5.0V
- 68WAY
- LEADFREE

DESCRIPTION: