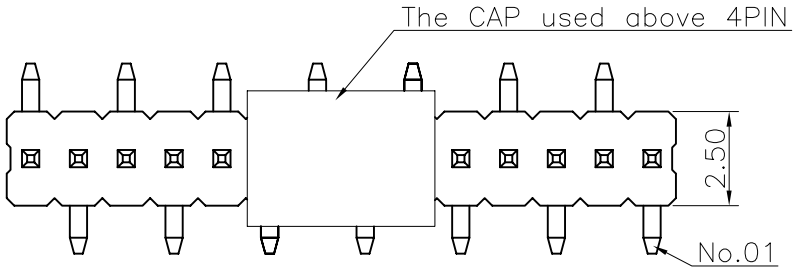

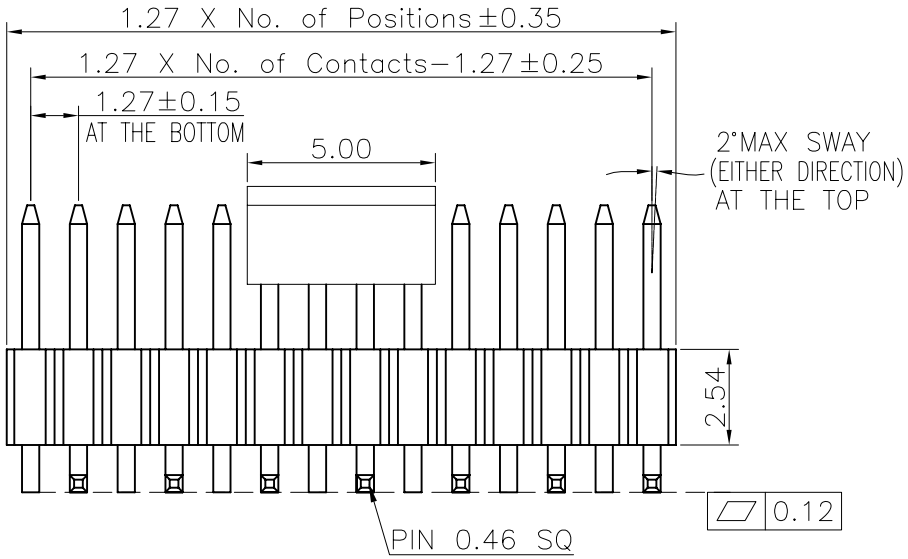

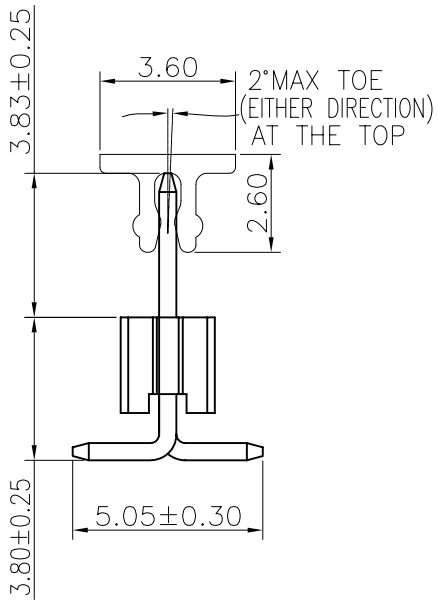

Specifications
Current Rating:1.0Amp
Insulation Resistance:1000MΩMin.
Dielectric Withstanding Voltage:300VAC
Contact Resistance:20mΩMax.
Operating Temperature:−40°C to +105°C
Materials
Contact Material:Brass
Insulator Material:High Temperature Thermoplastic, UL 94V−0 LCP or the equivalent material
Plating:Gold Flash

Recommended P.C.Board Layout
(Tolerance:±0.05)

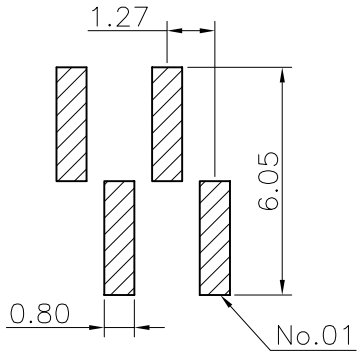

RoHS Compliant

MORETHANALL
PCB CONNECTORS
Cable ASSEMBLIES
煜倫股份有限公司
www.morethanall.com

DRAWING BY CY		TOLERANCES ARE
CHECKED BY GENIUS		X. ±
UNIT / mm	SCALE 1 : 1	.X ± 0.30
DATE		.XX ± 0.25
		.XXX ± 0.15
		ANG ±
SIZE A4	PPOJECTION	

照片框

ORDER INFORMATION

P-V38X38C-1XxxR-LF

SERIES
180°SMT
HIGH 3.8mm
NON POST
CAP
CONTACT 3.83mm
1X02:02WAY
1X50:50WAY
R TYPE FOOT
LEADFREE

DESCRIPTION: 1.27 PIN HEADER SINGLE ROW SMT TYPE CONNECTOR