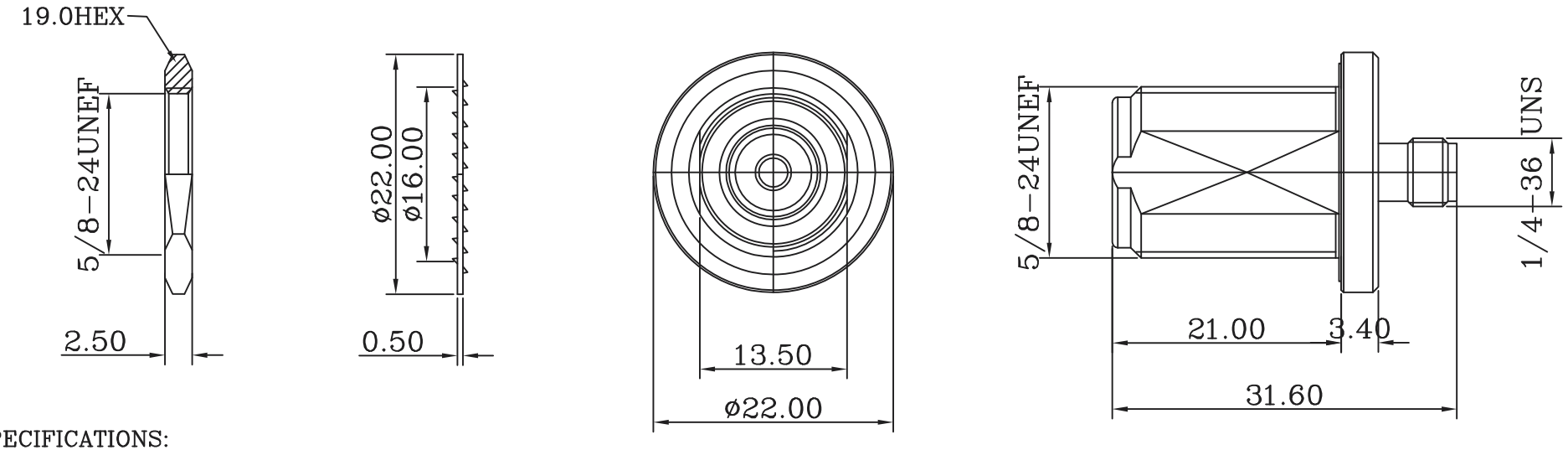

SPECIFICATIONS:
IMPEDANCE: 50 Ohms
FREQUENCY RANGE: 0-6 GHz
WORKING VOLTAGE: 1000 Vrms Max.
DIELECTRIC WITHSTANDING VOLTAGE: 2500 VRMS MIN
INSULATOR RESISTANCE: 5000 MEGOHMS MIN
VSWR: 1.2 MAX.

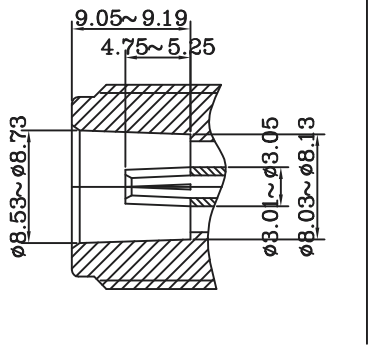

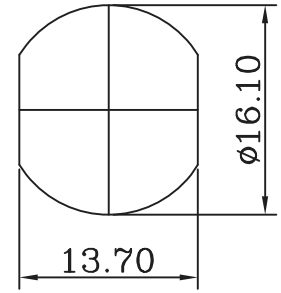

RECOMMENDED
MOUNTING HOLE

ITEM	DESCRIPTION	MATERIAL	Q'TY	FINISHED
7	LOCK WASHER	BRASS	1	NICKEL PLATED
6	HEX NUT	BRASS	1	NICKEL PLATED
5	GASKET	RUBBER	1	RED
4	SMA BODY	BRASS	1	NICKEL PLATED
3	CONTACT PIN	Be,Cu	1	GOLD PLATED
2	INSULATOR	TEFLON	1	WHITE
1	BODY	BRASS	1	NICKEL PLATED

RoHS Compliant

MORETHANALL
PCB CONNECTORS
Cable ASSEMBLIES
煜倫股份有限公司
www.morethanall.com

DRAWING BY CY
CHECKED BY GENIUS
UNIT / mm | SCALE 1 : 1
DATE
SIZE A4 | PPOJECTION

TOLERANCES ARE
0.5-15 = ±0.15
15-30 = ±0.30
30-120 = ±0.60
>120 = ±1.00
ANGLES ±5°

照片框

ORDER INFORMATION

NSMA-FSPBNW-50-LF
SERIES
FEMALE TO FEMALE
BACK PANEL
NUT
WASHER
50 OHM
LEADFREE

DESCRIPTION: N FEMALE TO SMA FEMALE 50 OHM