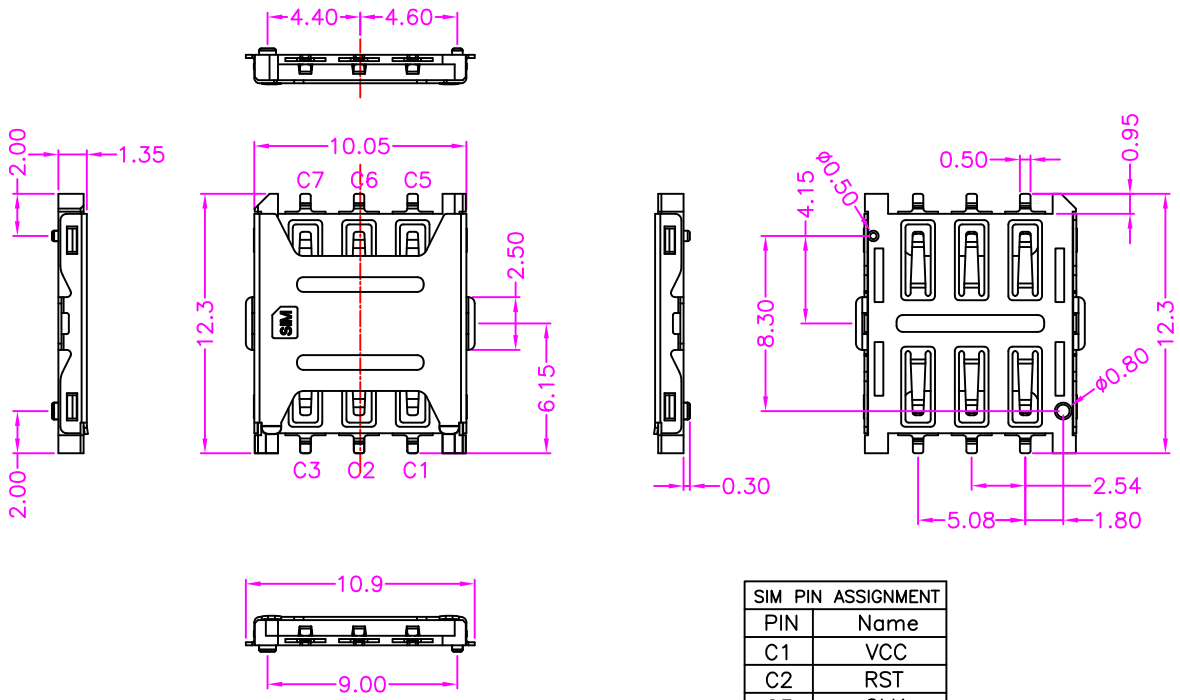

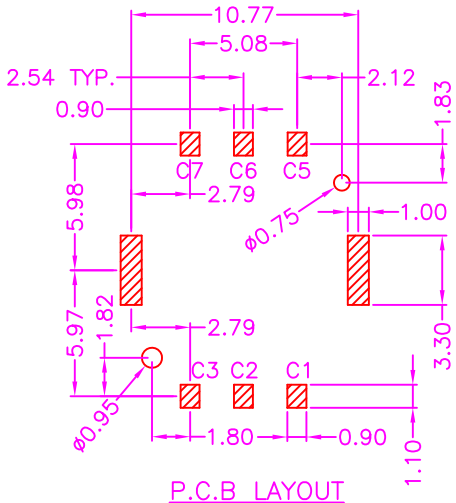

P.C.B LAYOUT
TOP VIEW ±0.05

SIM PIN ASSIGNMENT	
PIN	Name
C1	VCC
C2	RST
C3	CLK
C5	GND
C6	VPP
C7	I/O

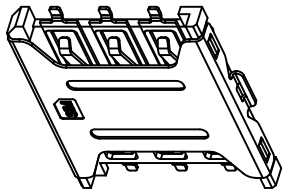

MATERIALS

HOUSING: HI–TEMP. PLASTIC (UL 94V–0)
SHELL: STAINLESS STEEL, NICKEL PLATING
SOLDER PAD: STAINLESS STEEL, GOLD FLASH
TERMINAL: COPPER ALLOY, GOLD PLATING

SPECIFICATION

CURRENT RATING: 0.5 AMP MAX
DIELECTRIC WITHSTANDING: 500V AC FOR ONE MINUTE
CONTACT RESISTANCE: 100m OHMS MAX
INSULATION RESISTANCE: 1000M OHMS MIN AT DC 500V
OPERATION TEMPERATURE: –40°C~+85°C

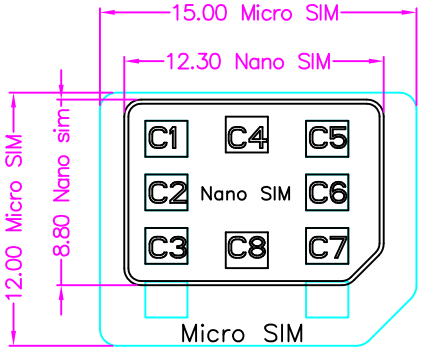

RoHS Compliant

MORETHANALL
PCB CONNECTORS
Cable ASSEMBLIES
煜倫股份有限公司
www.morethanall.com

DRAWING BY CY		TOLERANCES ARE
CHECKED BY GENIUS		X. ± 0.40 .X ± 0.30 .XX ± 0.20 .XXX ± 0.10 ANG ± 1°
UNIT / mm	SCALE 1 : 1	
DATE		
SIZE A4	PPOJECTION	

照片框

ORDER INFORMATION

NASCT-W1213PR-06-LF

SERIES
90°SMT
PAD TO PAD 11.95mm
HIGH 1.35mm
POST
REEL
06WAY
LEADFREE

DESCRIPTION: NANO SIM CARD, 6PIN, PCB MOUNT, SMT, METAL SHIELD, FEMALE, H=1.35mm

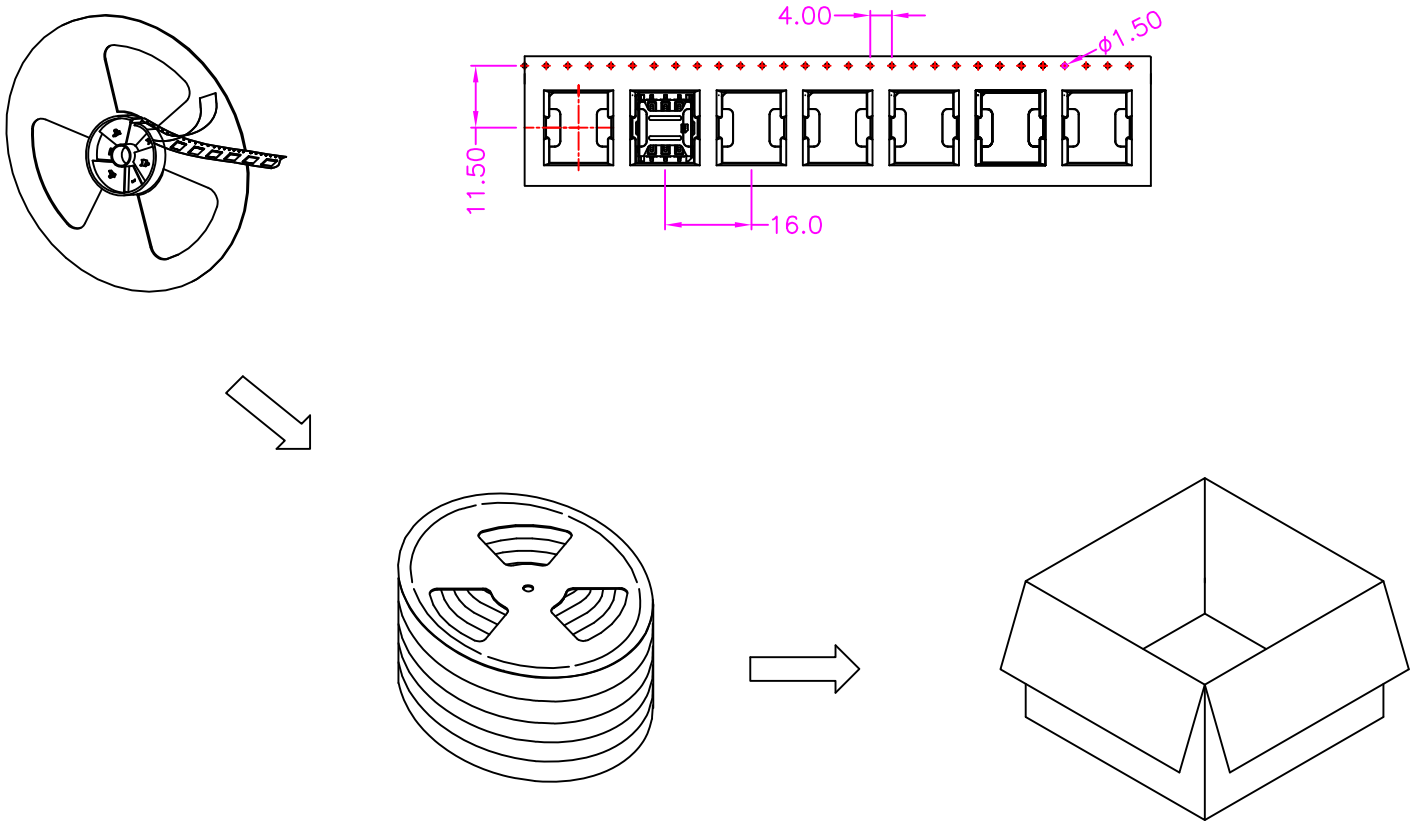

NOTE:1800PCS/ REEL, 9000PCS/ 5 REEL/ CARTON

RoHS Compliant

MORETHANALL
PCB CONNECTORS
Cable ASSEMBLIES
煜倫股份有限公司
www.morethanall.com

DRAWING BY CY	
CHECKED BY GENIUS	
UNIT / mm	SCALE 1 : 1
DATE	
SIZE A4	PPOJECTION

TOLERANCES ARE
X. ± 0.40
.X ± 0.30
.XX ± 0.20
.XXX ± 0.10
ANG ± 1°

照片框

ORDER INFORMATION

NASCT-W1213PR-06-LF

SERIES
90°SMT
PAD TO PAD 11.95mm
HIGH 1.35mm
POST
REEL
06WAY
LEADFREE

DESCRIPTION: NANO SIM CARD, 6PIN, PCB MOUNT, SMT, METAL SHIELD, FEMALE, H=1.35mm