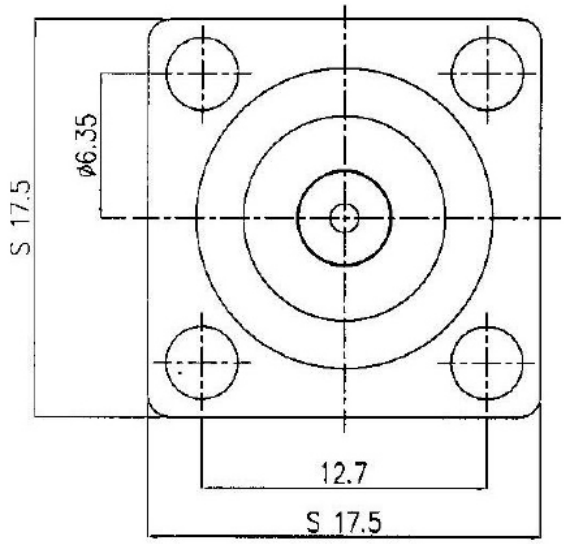

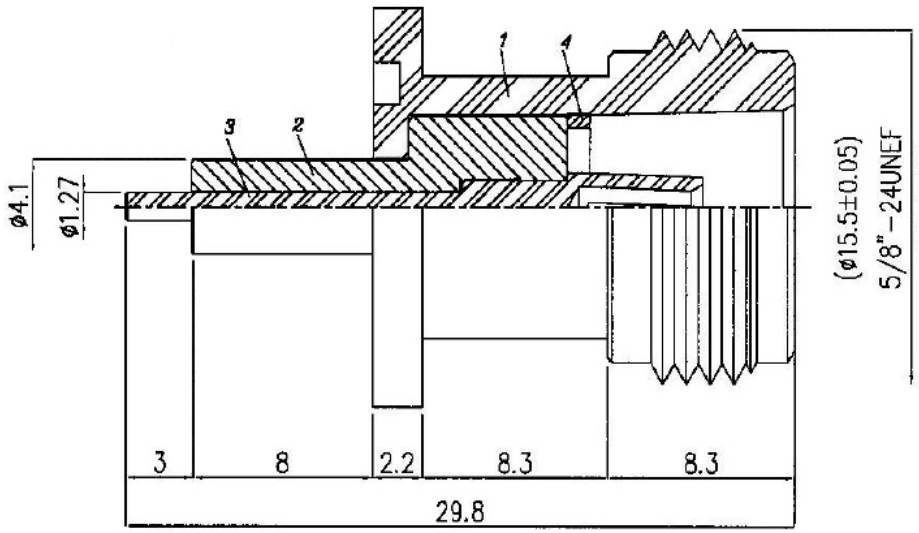

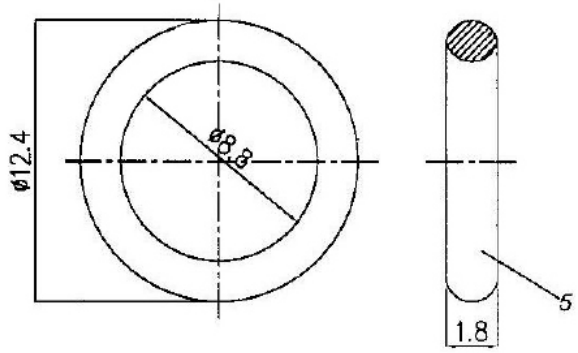

NO	DESCRIPTION	Q'TY	ITEM NO.	MATERIAL	PLATING
1	BODY	1	N-P245	BRASS	NICKEL 100μ" MIN.
2	DIELECTRIC	1	T-080031	TEFLON	-
3	CENTER PIN	1	N-P245	BRASS	NICKEL 100μ" MIN.
4	PARTS	1	R-08002	BRASS	GOLD 3-5μ" MIN.
5	WATERPROOF SEAL	1	WP-12001	BRASS	NICKEL 100μ" MIN.

RoHS Compliant

MORETHANALL
PCB CONNECTORS
Cable ASSEMBLIES
煜倫股份有限公司
www.morethanall.com

DRAWING BY CY		TOLERANCES ARE
CHECKED BY GENIUS		X. ±
UNIT / mm	SCALE 1 : 1	.X ±
		.XX ±
		.XXX ±
DATE		ANG ±
SIZE A4	PPOJECTION	

照片框

ORDER INFORMATION

N-JSPQP8030-50-LF

SERIES
JACK
SOLDER
PIN
PANEL SQUARE
8.0+3.0mm
50 OHM
LEADFREE

DESCRIPTION: