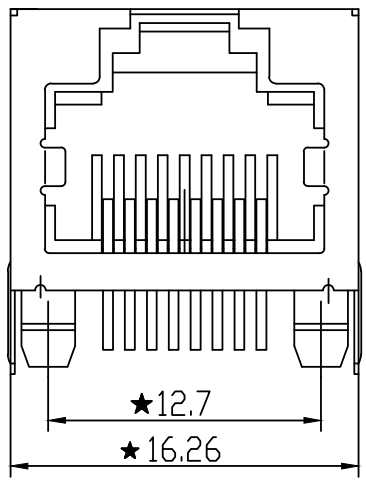

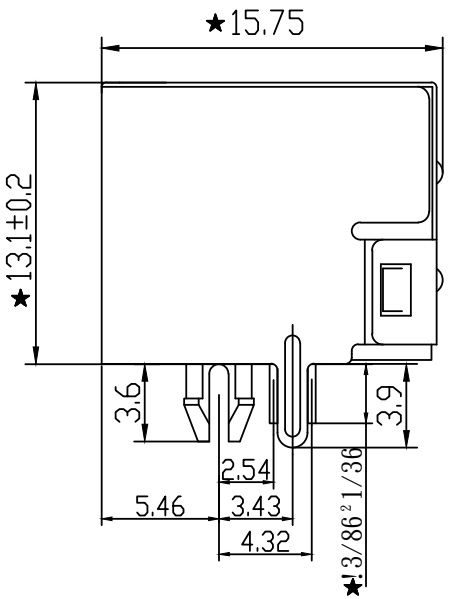

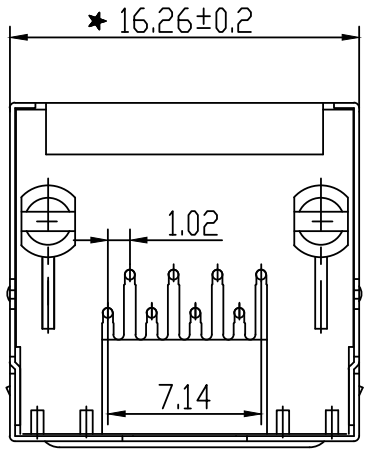

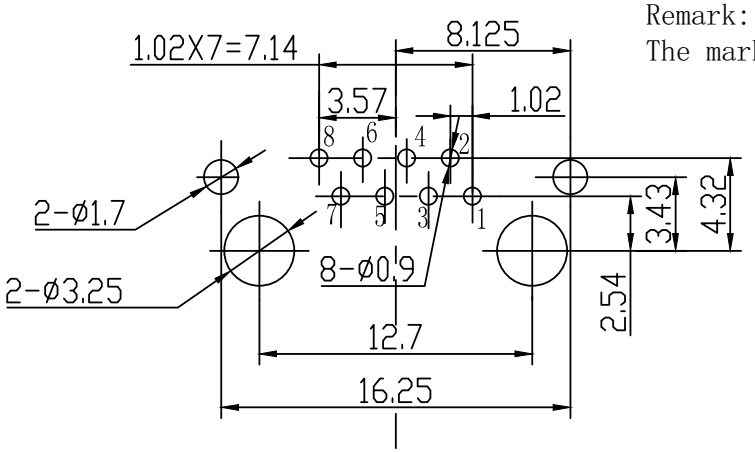

PC Board Layout

NOTES:

ELECTRICAL:

1. VOLTAGE RATING: 125 VAC RMS.
2. CURRENT RATING: 1.5 AMP.
3. CONTACT RESISTANCE: 30 MILLIOHMS MAX.
4. INSULATION RESISTANCE: 500 MEGOHMS MIN @ 500 VDC.
5. DIELECTRIC STRENGTH: 1000 VAC RMS 50Hz or 60Hz, 1MIN.

MECHANICAL:

1. HOUSING & INSERT MATERIAL: PA46 UL94V-0.
2. CONTACT MATERIAL: DIAMETER 0.45MM PHOSPHOR BRONZE
   GOLD PLATING OVER NICKEL.
3. SHIELD : 0.20~0.25MM TEICKNESS BRASS WITH NICKEL PLATED.
4. MATING/UNMATING FORCE: 2.2KG.F MAX.
5. RETENTION STRENGTH: 7.7KG.F MIN BETWEEN JACK AND PLUG.
6. OPERATING LIFE: 750 CYCLES MIN.

ENVIRONMENTAL:

1. STORAGE: -40°C~+85°C RELATIVE HUMIDITY <70%.
2. OPERATION -40°C~+85°C

Remark:

The mark with ★ is the key inspection dimension for QC

RoHS Compliant

MORETHANALL PCB CONNECTORS Cable ASSEMBLIES

煜倫股份有限公司

www.morethanall.com

DRAWING BY CY		TOLERANCES ARE
CHECKED BY GENIUS		X. ±
UNIT / mm	SCALE 1 : 1	.X ± 0.25
DATE		.XX ± 0.15
		.XXX ± 0.05
		ANG ±
SIZE A4	PPOJECTION	

照片框

ORDER INFORMATION

MJF13U-KX06B3-0808-LF

SERIES

BLACK

NON EAR

06u" GOLD

REAR TAB 3.05mm

8P8C

LEADFREE

DESCRIPTION: