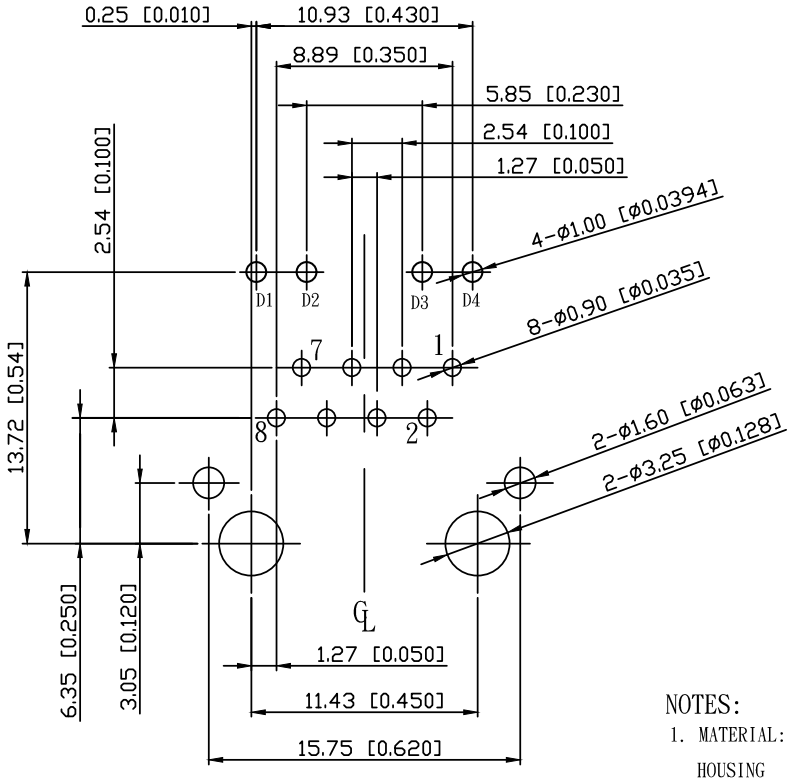

SUGGESTED PCB LAYOUT

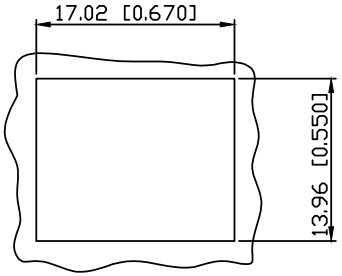

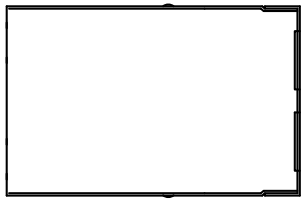

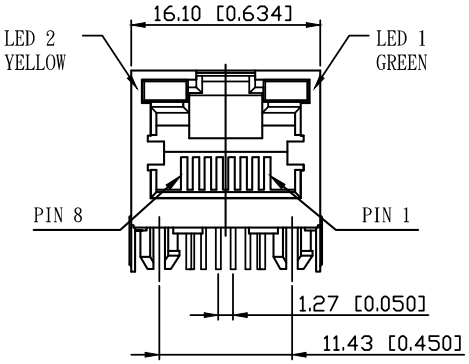

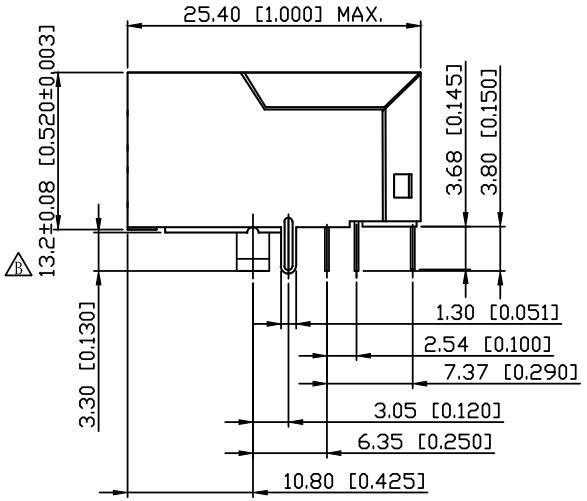

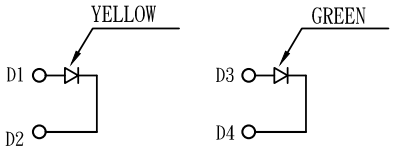

NOTES:

1. MATERIAL:

   HOUSING -PBT POLYESTER UL94V-0
   MIXED GLASS FIBER.
   STANDARD COLOR-BLACK

   CONTACTS -0.35mm THICK PHOS-BRONZE PLATED
   WITH 6u" GOLD AND TIN IN
   SOLDER AREA.

   SHIELD -0.20mm TIHCK COPPER ALLOY,
   PLATED WITH NICKEL.

2. OPERATING TEMPERATURE : 0°C~70°C
3. CAVITY CONFORMS TO FCC RULES AND REGULATIONS
   PART 68, SUBPART F.
4. UNSPECIFIED TOLERANCE: .XX ±0.25
   .X ±0.30

RoHS Compliant

MORETHANALL PCB CONNECTORS Cable ASSEMBLIES
煜倫股份有限公司
www.morethanall.com

DRAWING BY CY		TOLERANCES ARE
CHECKED BY GENIUS		X. ±
UNIT / mm	SCALE 1 : 1	.X ± 0.25
DATE		.XX ± 0.15
		.XXX ± 0.05
		ANG ±
SIZE A4	PPOJECTION	

照片框

ORDER INFORMATION

MJF13T25UL-KX06B3YG-0808

- SERIES
- BLACK
- NON EAR
- 06u" GOLD
- REAR TAB 3.05mm
- LED2:YELLOWG
- LED1:GREEN
- 8P8C

DESCRIPTION: RJ45, W/LED, with 10/100 Mbps Filter 8P, 8C, Shielded, Thru Hole.

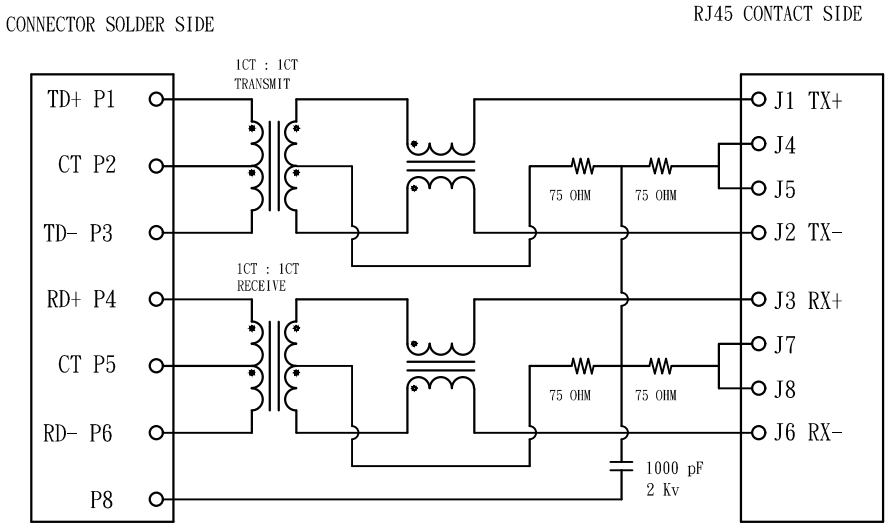

ELECTRICAL CHARACTERISTICS :

TEST NOTES:(25±5°C)

1. TR:(100KHz, 0.1V);
   PINS:(P1-P3):(J1-J2)=1:1±3%
   PINS:(P4-P6):(J3-J6)=1:1±3%
2. LX:(100KHz, 100mV, 8mA, DC Bias)
   PINS: (P1, P3), (P4, P6)=350uH MINIMUM
3. DCR:
   PINS:(J1-J2), (J3-J6)= 1.2 OHMS MAXIMUM
4. HIPOT:
   PINS(P1, P2, P3)TO(J1, J2)=1500VAC FOR 60 SECONDS
   PINS(P4, P5, P6)TO(J3, J6)=1500VAC FOR 60 SECONDS
5. INSERTION LOSS:
   -1.0dB MAXIMUM AT 0.3MHz TO 100MHz;
6. RETURN LOSS:
   -20dB MINIMUM AT 1MHz TO 30MHz;
   -15dB MINIMUM AT 30MHz TO 60MHz
   -10dB MINIMUM AT 60MHz TO 80MHz
7. CROSS TALK:
   -30dB MINIMUM AT 1MHz TO 100MHz
8. COMMON TO COMMON MODE REJECTION:
   -30dB MINIMUM AT 1MHz TO 100MHz

RoHS Compliant

MORETHANALL
PCB CONNECTORS
Cable ASSEMBLIES
煜倫股份有限公司
www.morethanall.com

DRAWING BY CY		TOLERANCES ARE
CHECKED BY GENIUS		X. ±
UNIT / mm	SCALE 1 : 1	.X ± 0.25
DATE		.XX ± 0.15
		.XXX ± 0.05
		ANG ±
SIZE A4	PPOJECTION	

照片框

ORDER INFORMATION

MJF13T25UL-KX06B3YG-0808

- SERIES
- BLACK
- NON EAR
- 06u" GOLD
- REAR TAB 3.05mm
- LED1:GREEN
- LED2:YELLOWG
- 8P8C

DESCRIPTION: RJ45, W/LED, with 10/100 Mbps Filter 8P, 8C, Shielded, Thru Hole.