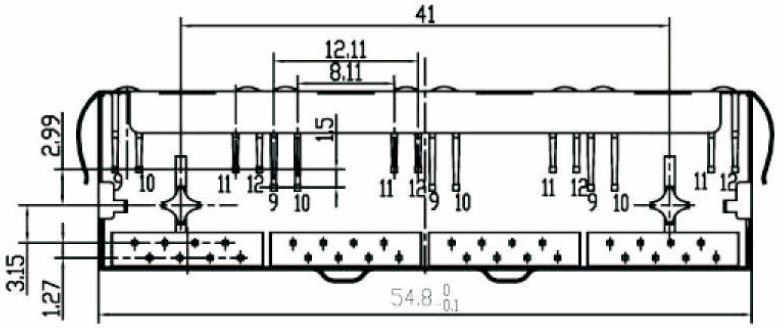

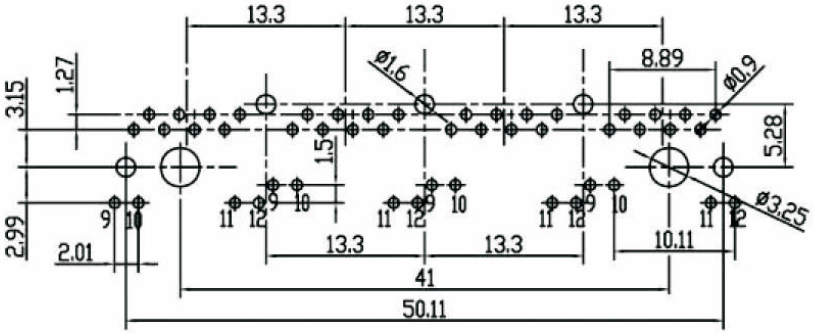

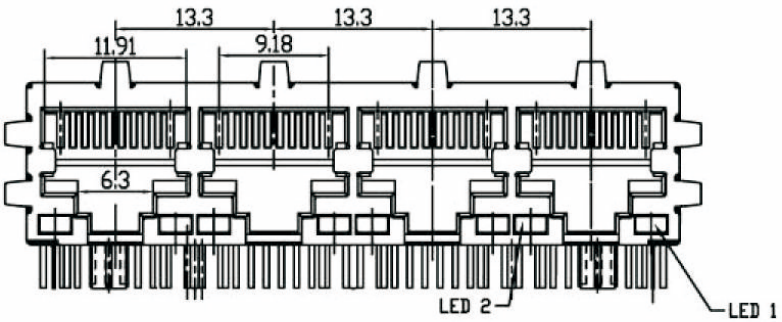

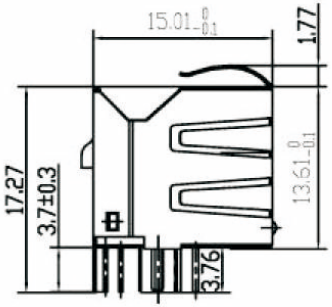

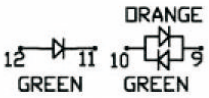

NOTES:

ELECTRICAL:

1. VOLTAGE RATING : 125 VAC RMS.
2. CURRENT RATING : 1.5 AMP.
3. CONTACT RESISTANCE : 30 MILLIOHMS MAX.
4. INSULATION RESISTANCE: 1000 MEGOHMS MIN @ 500 VDC.
5. DIELECTRIC STRENGTH: 1000 VAC RMS 60Hz, 1MIN.
6. LED RATINGS: FORWARD VOLTAGE: 2.2 VOLTS TYPICAL.
   REVERSE VOLTAGE: 5 VOLTS MAXIMUM
7. OPERATING: 750 CYCLES MIN.

MECHANICAL:

1. HOUSING MATERIAL : PBT+30%.G.F UL94V-0. COLOR-BLACK.
2. INSERT MATERIAL : PBT+30%GF UL94V-0. COLOR-BLACK.
3. BACK PLATE MATERIAL: PBT+30%GF. COLOR-BLACK.
4. LED SIZE : 3.2*2.0*7.0*P=2.54mm.
5. SHIELD MATERIAL : COPPER ALLOY 0.25mm THICKNESS PLATING NI.
6. CONTACT MATERIAL : PHOSPHOR BRONZE 0.35mm THICKNESS OR ø0.46mm.
7. PLATING : GOLD PLATING OVER NICKEL.
8. PCB RETENTION PRE-SOLDER : 1 LB MIN.
9. PCB RETENTION POST-SOLDER: 10 LBS MIN.

ENVIRONMENTAL:

1. STORAGE : -40°C TO +85°C.
2. OPERATION: -40°C TO +85°C.
3. WAVE SOLDERING TEMPERRATURE:230~250°C(5~10 SECONDS)

MATES WITH MODULAR PLUG CONFORMING
TO FCC PART 68, SUBPART F.

RoHS Compliant

MORETHANALL
PCB CONNECTORS
Cable ASSEMBLIES
煜倫股份有限公司
www.morethanall.com

DRAWING BY CY		TOLERANCES ARE
CHECKED BY GENIUS		X. ±
UNIT / mm	SCALE 1 : 1	.X ±
		.XX ±
DATE		.XXX ±
		ANG ±
SIZE A4	PPOJECTION	

照片框

ORDER INFORMATION

MJF13LA4-KF06MP1GOXG-0808-LF

- SERIES
- BLACK
- FULL SPRING
- 06u" GOLD
- METAL FOOT+POST
- GREEN,ORANGE / X,GREEN
- 8P8C
- LEADFREE

DESCRIPTION: