MATERIALS:

- HOUSING-PBT POLYESTER UL94V-0
  MIXED GLASS FIBER.
  STANDARD COLOR-BLACK
- CONTACTS-0.45mm DIA. ROUND PHOS-BRONZE
  PLATED WITH HARD GOLD.

CAVITY CONFIRMS TO FCC RULES AND REGULATIONS
PART 68,SUBPART F.

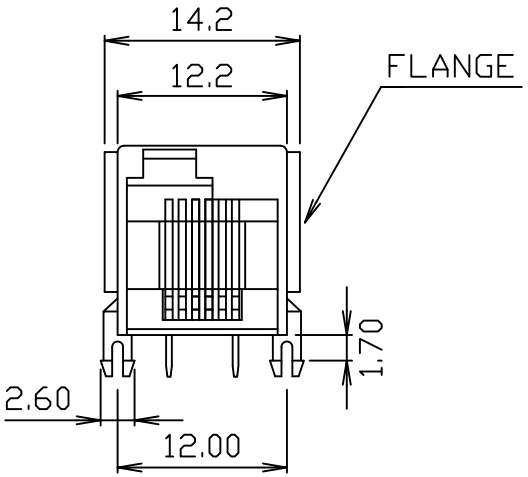

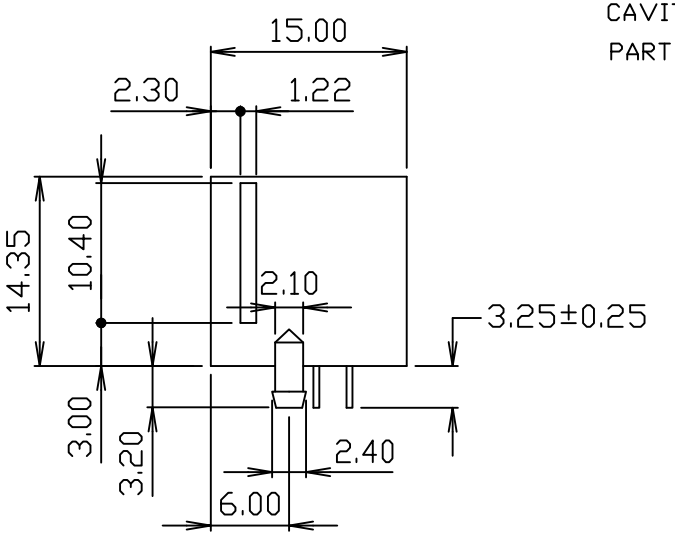

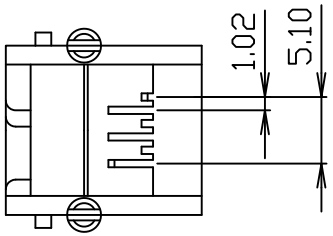

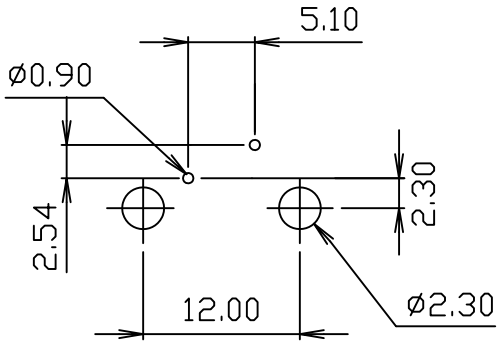

PC Board Layout

RoHS Compliant

MORETHANALL
PCB CONNECTORS
Cable ASSEMBLIES
煜倫股份有限公司
www.morethanall.com

DRAWING BY CY		TOLERANCES ARE
CHECKED BY GENIUS		X. ±
UNIT / mm	SCALE 1 : 1	.X ±
		.XX ±
DATE		.XXX ±
		ANG ±
SIZE A4	PPOJECTION	

照片框

ORDER INFORMATION

MJ14L-KE06-0602D16-LF

SERIES
BLACK
EAR
06u"GOLD
6P2C
D KEY TYPE
1.6 PIN
LEADFREE

DESCRIPTION: 6POSITION OFF-CENTER LOW PROFILE SIDE ENTRY PCB JACK