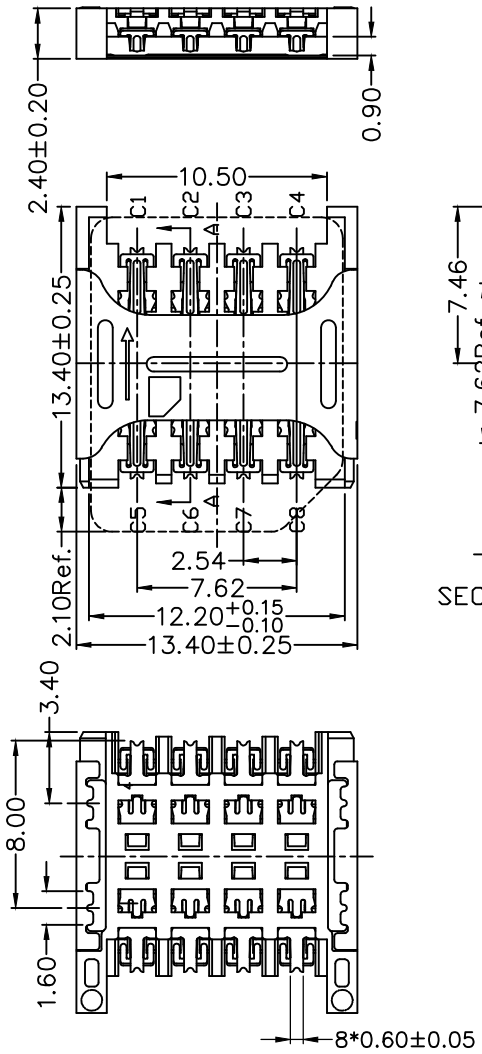

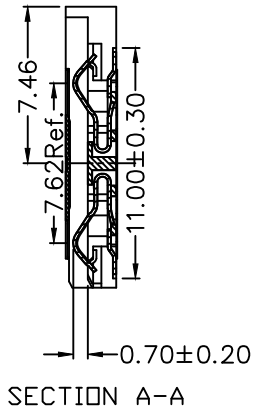

SECTION A-A

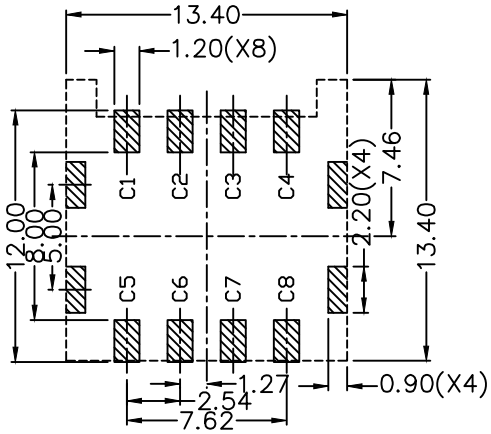

RECOMMENDED P.C.B LAYOUT
COMPONENT SIDE(TOLERANCE ±0.05)

PIN NO.	PIN NAME
C1	Supply Voltage Vcc
C2	Reset (RST)
C3	Clock(CLK)
C4	N/A
C5	Ground
C6	Programming Voltage Vpp
C7	I/O
C8	N/A

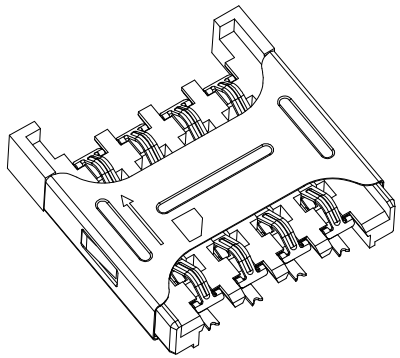

MATERIALS:
HOUSING: HI-TEMP. PLASTIC (UL 94V-0), BLACK
TERMINAL: PHOSPHOR BRONZE, GOLD PLATED OVER ALL
SHELL:STAINLESS STEEL SMT AREA GOLD PLATED
SPECIFICATION:
CURRENT RATING: 0.5 AMP MAX
DIELECTRIC WITHSTANDING: 500V AC FOR ONE MINUTE
CONTACT RESISTANCE: 30m OHMS MAX
INSULATION RESISTANCE: 1000M OHMS MIN AT DC 500V
OPERATION TEMPERATURE: −25°C~+85°C

RoHS Compliant

MORETHANALL PCB CONNECTORS Cable ASSEMBLIES
煜倫股份有限公司
www.morethanall.com

DRAWING BY CY		TOLERANCES ARE
CHECKED BY GENIUS		X. ±
UNIT / mm	SCALE 1 : 1	.X ± 0.25
DATE		.XX ± 0.15
		.XXX ± 0.10
		ANG ±
SIZE A4	PPOJECTION	

照片框

ORDER INFORMATION

MISCT-W1024X-08-LF

SERIES
90°SMT
HIGH 2.4mm
PAD TO PAD 10mm
NON POST
08WAY
LEADFREE

DESCRIPTION: MINI SIM CARD 8PIN