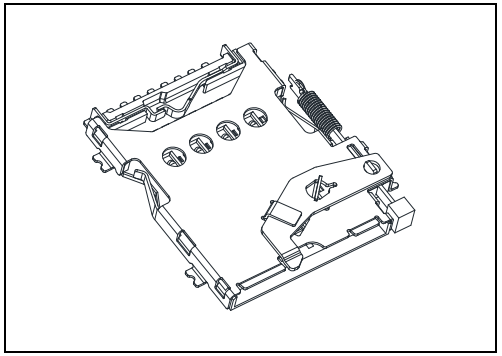

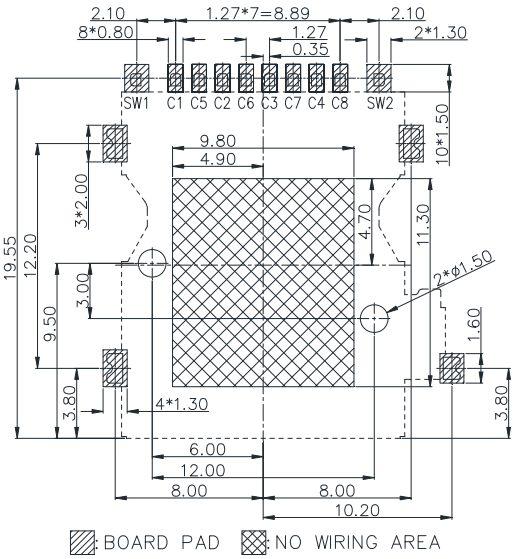

Unit: mm; Tolerances: 0.05 mm

Reference dimension for PCB layout

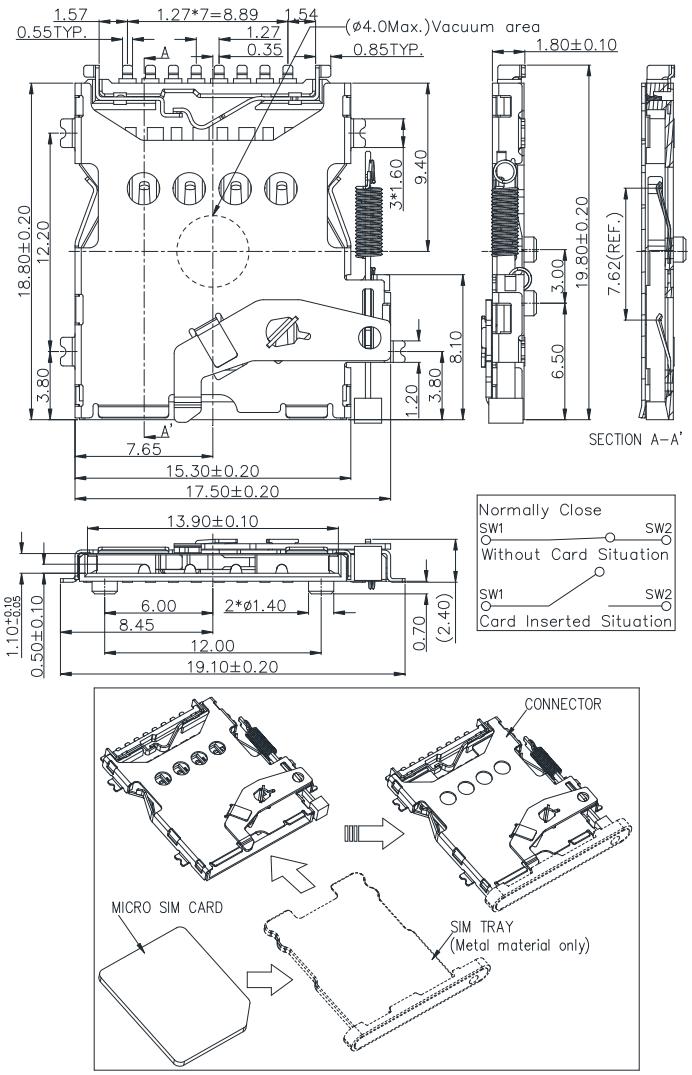

Unit: mm; Tolerances: 0.15 mm

Mechanical outline dimension

TECHNICAL CHARACTERISTICS

1. General Characteristics

Dimension: 18.80L x 17.50W x 1.80H mm
Weight: Approx. 0.87 g
Contact principle: Friction technology
Operating position: Shaft up / Down / Horizontal
Mounting System: SMT Type (with post)
Function: With Tray and Push Pull Type
(Total height= 2.40 mm & Tray exclude)
Durability: 5,000 cycles min.

2. Mechanical Characteristics

Insulation material: Thermoplastic, UL 94V-0
RoHS Directive 2011/65/EU Compliant

3. Electrical Characteristics

Number of contacts: 8 pins
Contact resistance: 50 m typical, 100 m max.
Insulation resistance: >1000 M / 500 VDC
Switch type: Blade
Operation: Normally Close

4. Solderability

Wave: Not applicable
IR reflow: 260 C, 10 sec. Max.
Manual soldering: 360 C, 3 sec. Max.

5. Environmental Characteristics

Operating temperature: - 40 C ~ + 85 C
Operating humidity: 10 % ~ 95 % RH
Storage temperature: - 40 C ~ + 85 C
Storage humidity: 10 % ~ 95 % RH

RoHS Compliant

MORETHANALL
PCB CONNECTORS
Cable ASSEMBLIES
煜倫股份有限公司
www.morethanall.com

DRAWING BY CY	TOLERANCES ARE
CHECKED BY GENIUS	X. ±
UNIT / mm SCALE 1 : 1	.X ±
DATE	.XX ±
SIZE A4 PPOJECTION	.XXX ±
	ANG ±

照片框

ORDER INFORMATION

MISCE-W123PA-08-LF
SERIES
90°SMT
POST TO POST 12.0mm
PUSH PUSH
CLOSED TYPE
08WAY
LEADFREE

DESCRIPTION: