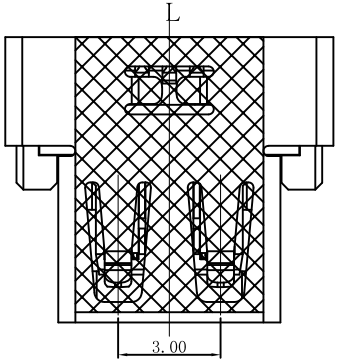

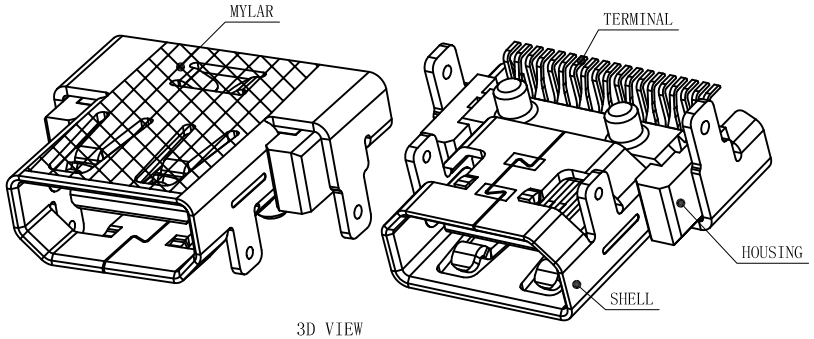

3D VIEW

NOTES:

1. MATERIAL:
   1.1 HOUSING: HIGH TEMPERATURE THERMOPLASTIC UL 94V-0 RATED, BLACK
   1.2 TERMINAL: COPPER ALLOY
   1.3 SHELL: COPPER ALLOY
2. PLATING:
   2.1 CONTACT: GOLD PLATED OVER NICKEL
   2.2 SHELL: NICKEL PLATED

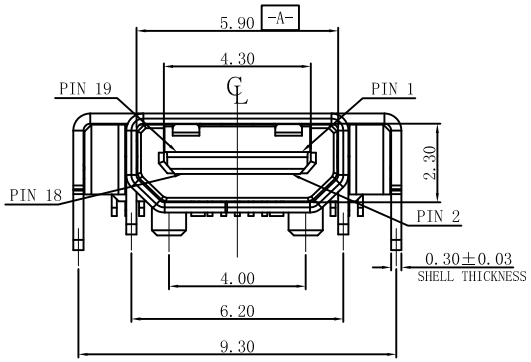

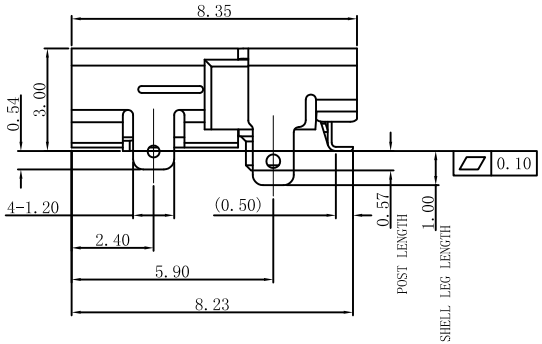

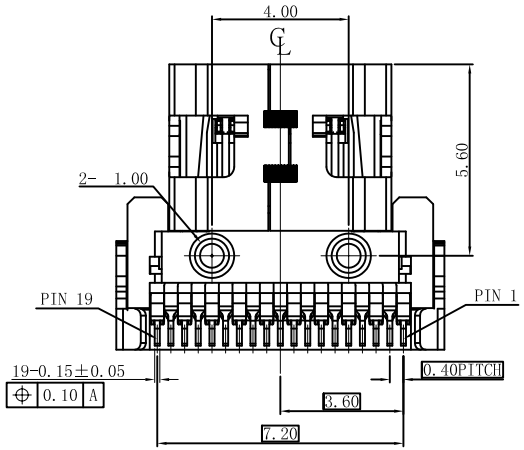

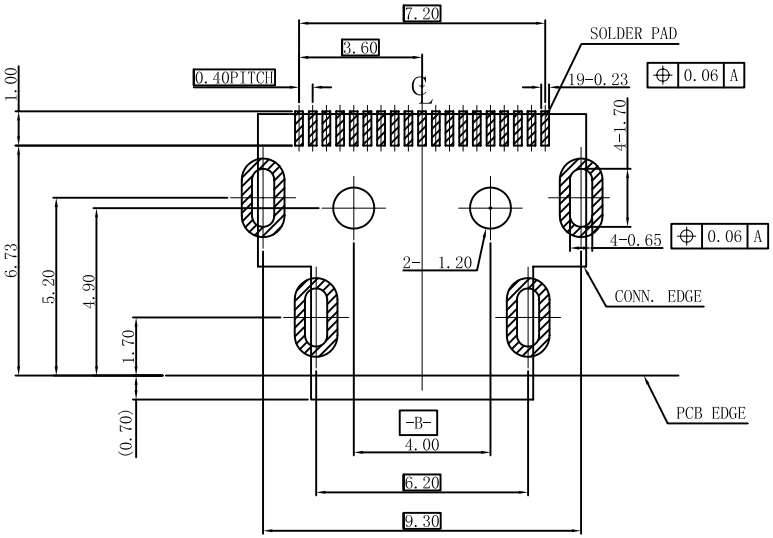

RECOMMENDED PCB LAYOUT THICKNESS = 0.80 mm
TOLERANCE = ±0.05
(TOP VIEW)

RoHS Compliant

MORETHANALL PCB CONNECTORS Cable ASSEMBLIES
煜倫股份有限公司
www.morethanall.com

DRAWING BY CY		TOLERANCES ARE
CHECKED BY GENIUS		X. ±
UNIT / mm	SCALE 1 : 1	.X ±
		.XX ±
DATE		.XXX ±
		ANG ±
SIZE A4	PPOJECTION	

照片框

ORDER INFORMATION

MIHDMI-SWMPC-19-LF

- SERIES
- FEMALE
- 90°SMT
- METAL FOOT
- POST
- MYLAR
- 19 WAY
- LEADFREE

DESCRIPTION: HDMI D TYPE FEMALE & SMT TYPE