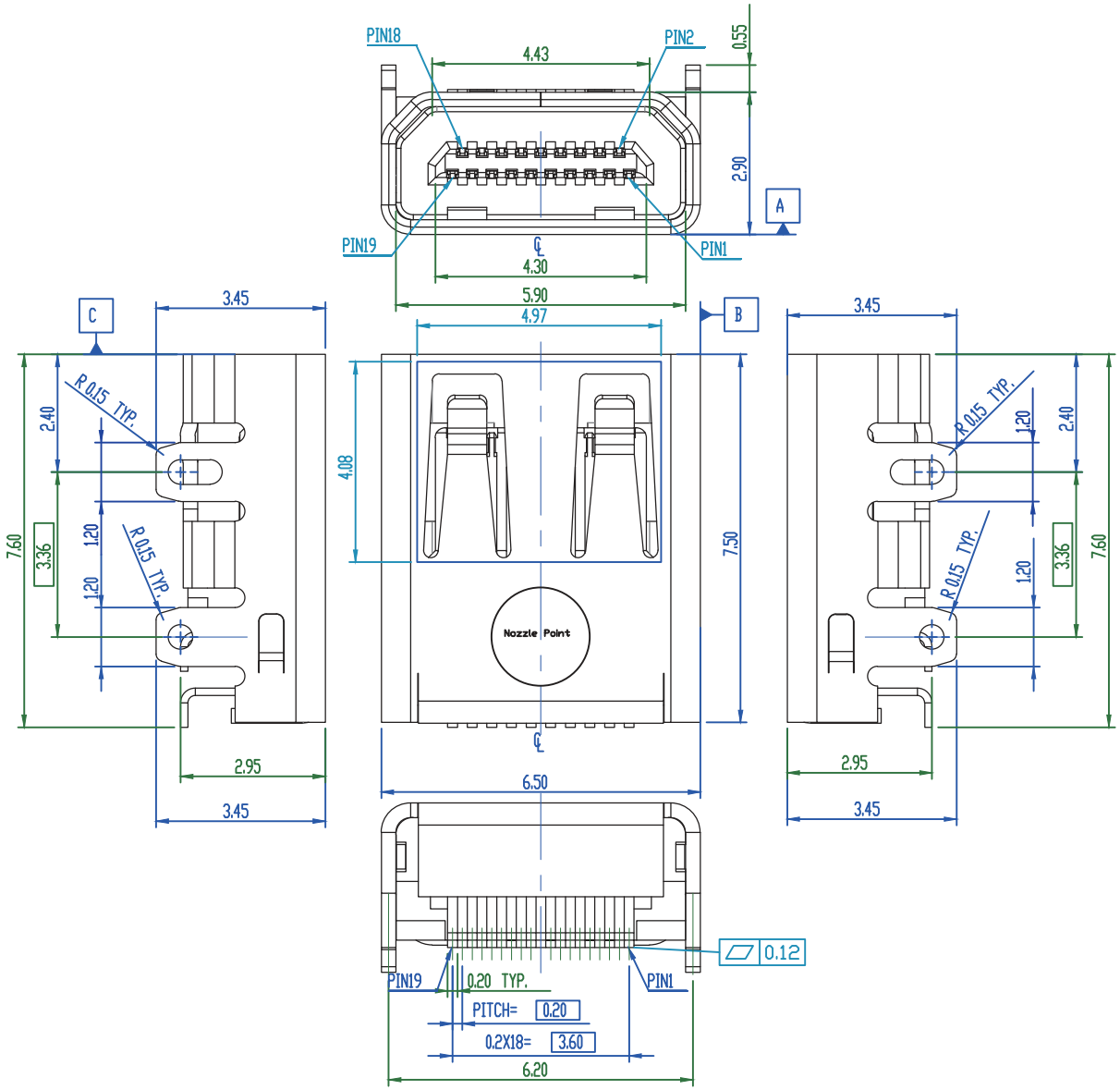

NOTES :
1.Material :
Housing : High temperature thermoplastic,UL94-V0.
Color : Black
HDMI Terminal : Copper Alloy.
Cover : Copper Alloy.
2.Finish :
Terminal : Underplate : Ni 50 μ" MIN. over all.
Solder tail μ"100 Sn MIN. Lead free over Ni plate.
Contact arer: Au over Ni plate
Cover : Underplate :50 μ" MIN. Ni over all.
Sn μ" 100 MIN over Ni .
3.Coplanarity Must Be Within 0.12 Max.

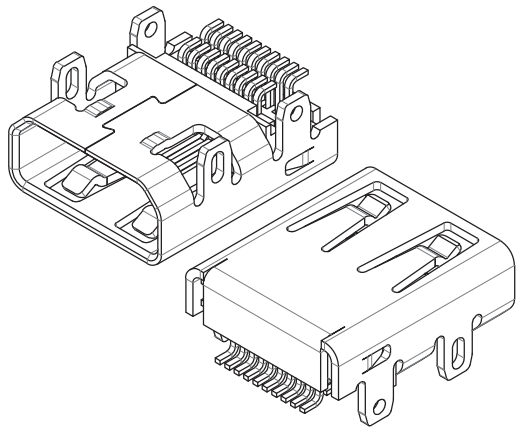

RoHS Compliant

MORETHANALL
PCB CONNECTORS
Cable ASSEMBLIES
煜倫股份有限公司
www.morethanall.com

DRAWING BY CY		TOLERANCES ARE
CHECKED BY GENIUS		X. ± .X ± .XX ± .XXX ± ANG ±
UNIT / mm	SCALE 1 : 1	
DATE		
SIZE A4	PPOJECTION	

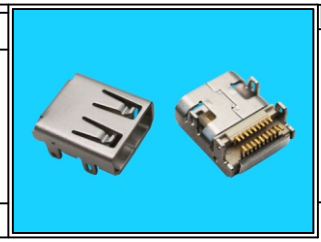

ORDER INFORMATION

MIHDMI-SWMM-19-LF

SERIES
FEMALE
90°SMT
METAL FOOT
19 WAY
LEADFREE

DESCRIPTION: HDMI TYPE D RECEPTACLE CONNECTOR