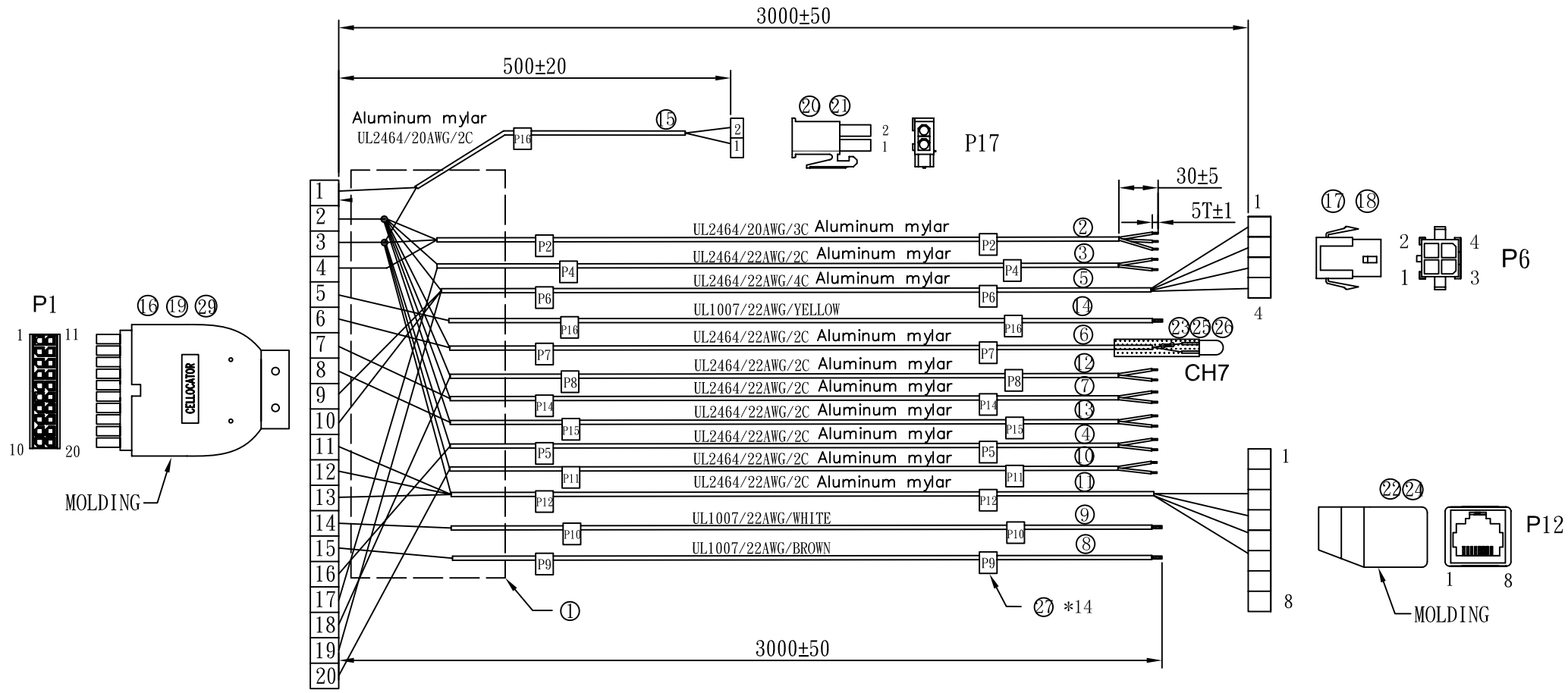

MIFX7-2020AM-F3M-LF

LEADFREE

RoHS Compliant

MORETHANALL CONNECTORS ASSEMBLIES	PART NO. MIFX7-2020AM-F3M						
	DWG NO. MIFX7-2020AM-F3M	CHECKED BY CY	TOLERANCES ARE .X ± 0.2 .XX ± .XXX ± AWG	DESCRIP TION:	WIRE HARNESS		
煜倫股份有限公司	FILE NO.	DRAWING BY					
	UNIT / mm	SCALE 1 : 1	PROJECTION	AREA	REVISIONS	HK	DATE

ITEM	PART NO	Q'TY	DESCRIPTION
01	TUBE	1	BLACK HEAT SHRINK TUBE OD=30 L=65MM V2
02	CABLE	1	UL2464 20AWG 3C(PURPLE RED BLACK) BLACK PVC JACKET OD:4.3 L=3000(60*30)(3*5T)MM Aluminum mylar
03		1	UL2464 22AWG 2C(BROWN RED) BLACK PVC JACKET OD:3.2 L=3000(60*30(3*5T)MM Aluminum mylar Aluminum mylar
04		1	UL2464 22AWG 2C(BLACK GRAY) BLACK PVC JACKET OD:3.2 L=3000(60*30)(3*5T)MM Aluminum mylar
05		1	UL2464 22AWG 4C(RED GRAY YELLOW BLACK) BLACK PVC JACKET OD:4.3 L=3000(60*30)(3*3)MM Aluminum mylar
06		1	UL2464 22AWG 2C(RED BLACK) BLACK PVC JACKET OD:3.2 L=3000(60*30)(3*5T)MM Aluminum mylar
07		1	UL2464 22AWG 2C(RED GREEN) BLACK PVC JACKET OD:3.2 L=3000(60*30)(3*5T)MM Aluminum mylar
08	WIRE	1	UL1007 22AWG BROWN L=3000(3*5T)MM
09		1	UL1007 22AWG WHITE L=3000(3*5T)MM
10	CABLE	1	UL2464 22AWG 2C(BLACK ORANGE) BLACK PVC JACKET OD:3.2 L=3000(60*30)(3*5T)MM Aluminum mylar
11		1	UL2464 22AWG 4C(BLACK WHITE BLUE GREEN) BLACK PVC JACKET OD:4.3 L=3000MM Aluminum mylar
12		1	UL2464 22AWG 2C(RED YELLOW) BLACK PVC JACKET OD:3.2 L=3000(60*30)(3*5T)MM Aluminum mylar
13		1	UL2464 22AWG 2C(RED BLUE) BLACK PVC JACKET OD:3.2 L=3000(60*30)(3*5T)MM Aluminum mylar
14	WIRE	1	UL1007 22AWG YELLOW L=3000(3*5T)MM
15	CABLE	1	UL2464 20AWG 2C(RED BLACK) BLACK PVC JACKET OD:4.3 L=500(60*30(3*3)MM Aluminum mylar
16	TER	20	MICRO FIT 3.0 FEMALE CRIMPING TERMINAL
17		4	MICRO FIT 3.0 MALE CRIMPING TERMINAL
18	HSG	1	MICRO FIT 3.0 FEMALE HOUSING
19		1	MICRO FIT 3.0 MALE(MOLDING) HOUSING
20	TER	2	MINI FIT 4.2 FEMALE CRIMPING TERMINAL
21	HSG	1	MINI FIT 4.2 MALE HOUSING
22	JACK	1	RJ45 8PIN FEMALE(MOLDING)
23	LED	1	LED OD5.0 12V +LED HOLDER
24	PVC	1	15G
25	TUBE	1	BLACK HEAT SHRINK TUBE OD:5.0 L=55MM
26	電阻	1	3900Ω
27	LABLE	10	(L)25MM(W)13MM

LABLE

P2	Main Power & Iqnition	P10	Doors
P4	Gradual stop	P11	DALLAS
P5	Emegrency Button	P12	External Data
P6	Handsfree	P14	External standard Immobilizer
P7	LED	P15	Siren output
P8	Global output	P16	TTL(keypad) Input
P9	Global Input	P17	Backup Battery

PIN OUT

P1.1	RED	P17.1	P1.6	BLACK	P7
P1.2	RED	P2	P1.7	GREEN	P14
	RED	P4	P1.8	BLUE	P15
	RED	P6-4	P1.9	GREY	P6.3
	RED	P7	P1.10	YELLOW	P6.2
	RED	P8	P1.11	WHITE	P12.2
	RED	P14	P1.12	BLUE	P12.3
	RED	P15	P1.13	GREEN	P12.4
P1.3	BLACK	P2	P1.14	WHITE	P10
	BLACK	P5	P1.15	BROWN	P9
	BLACK	P11	P1.16	GREY	P5
	BLACK	P12.1	P1.17	BROWN	P4
	BLACK	P17.2	P1.18	YELLOW	P8
P1.4	VIOLET	P2	P1.19	BLACK	P6.1
P1.5	YELLOW	P16	P1.20	ORANGE	P11

MORETHANALL CONNECTORS ASSEMBLIES

煜倫股份有限公司

PART NO. MIFX7-2020AM-F3M			
DWG NO. MIFX7-2020AM-F3M	CHECKED BY CY	TOLERANCES ARE .X ± 0.2 .XX ± .XXX ± AWG	DESCRIP TION: WIRE HARNESS
FILE NO.	DRAWING BY		
UNIT / mm	SCALE 1 : 1	PROJECTION	AREA / REVISIONS / HK / DATE